Brüel & Kjær application notes

Tracking using the Type 2032/34

A common problem with FFT analysis of vibration measurement signals from rotating machinery is the smearing effect of harmonic components. This is caused by fluctuating machine speeds which occur, for example, due to changes in load. The Dual-Channel Signal Analyzers Type 2032 and 2034 have overcome this problem by use of the Order Tracking Multiplier Type 5050. Together these two instruments constitute a system which is ideal for order analysis of two vibration signals. By hooking up a computer, 3-D waterfall displays are available for documenting machine run-up and coast-down tests.

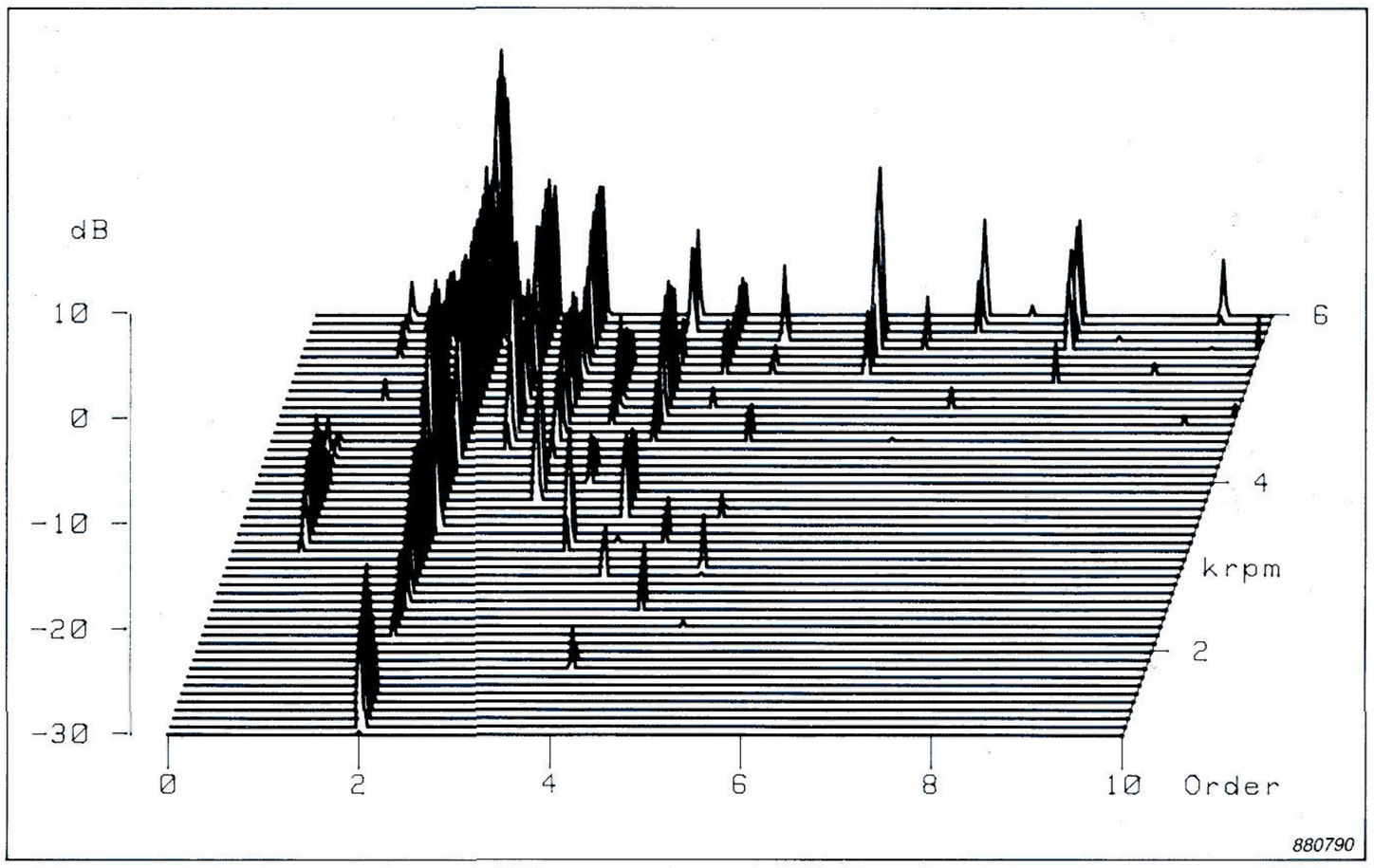

3-D spectral plot of an order analysis of a measurement from a car during run-up from 1000 RPM to 6000 RPM.

Introduction

In FFT analysis of vibration signals from machines, the smearing problem caused by the variation of the speed can be solved by tracking the RPM of the rotating machine and adjusting the sampling speed, of the data processing, in accordance with the RPM. This results in a spectrum in which each analysis line is associated with a harmonic or sub-harmonic of the machine RPM, whether or not the actual rotational frequency changes. The spectrum represents the RMS value of the machine speed fundamental and its related harmonics (orders). This type of analysis is termed **order analysis**.

Tracking is enabled by varying the sampling speed according to the rotational speed of the machine. However, this introduces an aliasing problem, which can be solved by using a tracking low-pass anti-aliasing filter. This is discussed further in Ref. 1. The sampling frequency and the low-pass cut-off frequency of the anti-aliasing

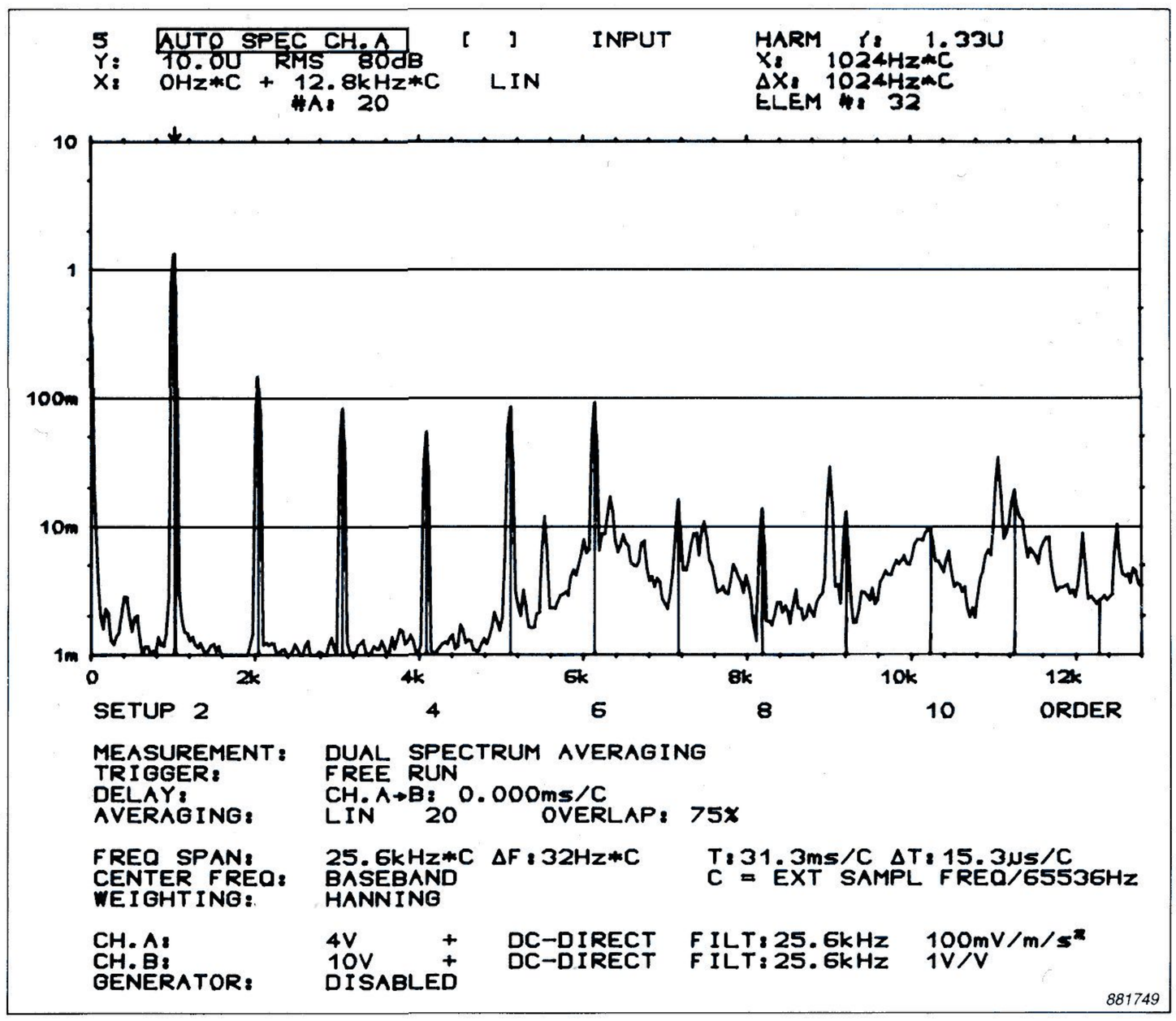

Fig. 1. An order spectrum of the vibration from a motor. The Type 5050 supplies the external sampling frequency to the analyzer, and handles the tacho ratios.

filter must be controlled by a signal from a tachometer used to measure the rotational speed.

Order analysis

The Order Tracking Multiplier Type 5050 is an instrument for tracking the RPM of machines and controlling the sampling frequency of the Dual-Channel Signal Analyzer Type 2032/34. The 5050 is tuned from a tachometer probe and has integral tracking anti-aliasing filters. It incorporates a frequency multiplier/divider for adjusting the frequency of the tacho signal to compensate for the effects of gear ratios, for example.

An instrumentation set-up for order analysis is shown in Figure 2. A number of tacho probes including Types MM 0002, MM 0012 and MM 0024 can be used. If the system is hooked up to a computer running the associated software, 3-D (waterfall) plots of spectra of run-up and coast-down tests are available. Modification WH 2111 to the 2032/34 enables use of line-drive amplifiers and direct connection to the line-drive inputs. The signals to the Type 5050 are then taken from (and returned to) the External Filter socket of the 2032/34.

Signal enhancement

The tracking system provided by the 5050 and 2032/34 can be used for making signal enhancement measurements from machines suffering from fluctuating speeds. Apart from supplying the external sampling frequency, the frequency multiplier enables two sets of gear ratios to be accounted for in the trigger signal, simplifying signal enhancement measurements.

Run-up, Coast-down

Run-up and coast-down tests, used to search for critical speeds and resonances excited by internal dynamic forces, can be aided by a computer handling and manipulating the data. 3-D spectral plots can be produced by using the appropriate software.

The Brüel & Kjær 3-D plot programs can take spectra from the analyzer, either as a function of time or as a function of RPM. If spectra are transferred at specified time intervals, the minimum transfer time is 50 ms for HP computers and 60 ms for IBM computers. If spectra are taken at specified RPM values, then the computer reads the RPM from the Type 5050. In this mode, the maximum transfer rate is 4 spectra per second.

The 3-D plot program WT 9121 is used with HP series 200/300 computers, and program WT 9321 is for IBM AT/XT and PS/2. Each program enables 3-D spectral plots, Campbell diagrams, single spectra, single frequency/order cuts, 3-D cuts, peak spectra and total RMS. An example of 3-D spectral plot (waterfall) is shown in the leading figure. It shows an order analysis measurement from a car engine during run-up from 1000 RPM to 6000 RPM. Most of the power is in the second order harmonic of the signal. Consequently, a slice was taken through the second order to produce a single order plot shown in Figure 3.

Ref. 1: "Order Analysis using zoom FFT", Brüel & Kjær Application Note No. 012–81.

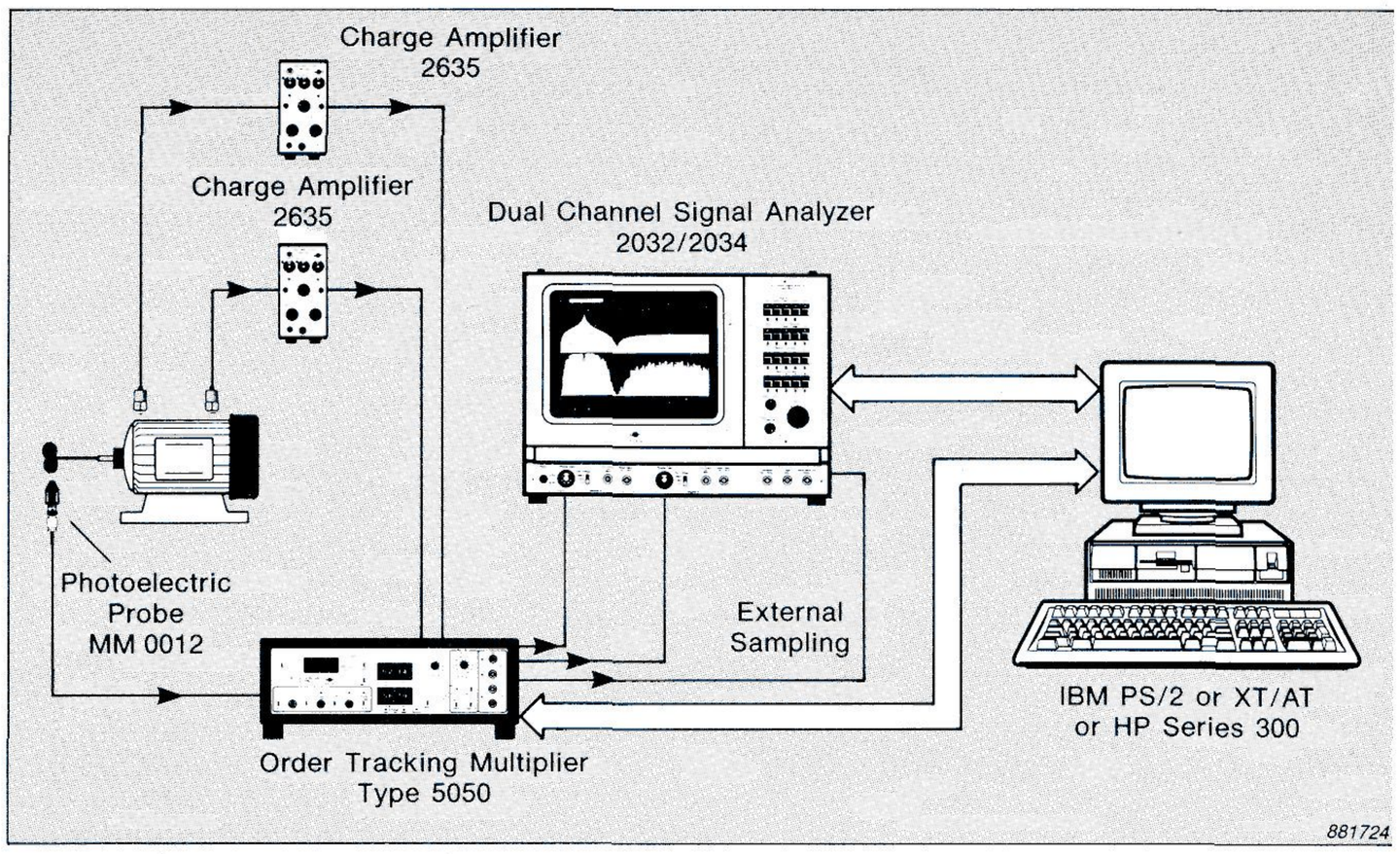

Fig. 2. Instrumentation set-up for tracking/order analysis using a Dual-Channel Analyzer Type 2032/34 and an Order Tracking Multiplier Type 5050 with WH 2110 modification (for the IEEE interface). Modification WH 2111 to the 2032/34 enables use of line-drive amplifiers and direct connection to the line-drive inputs of the 2032/34.

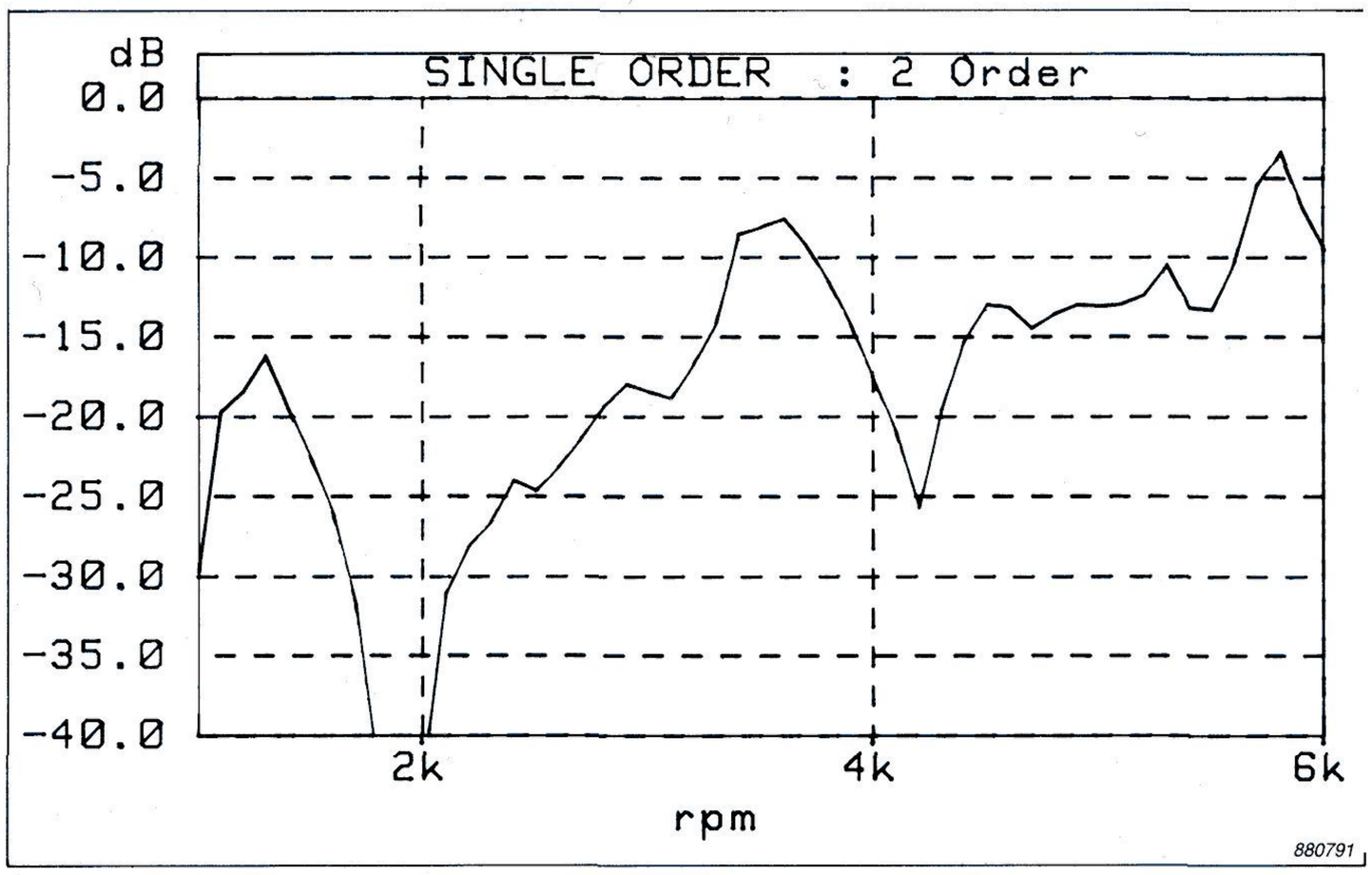

Fig. 3. A single order slice (level against RPM) through the second harmonic (order) of a measurement from a car during run-up from 1000 RPM to 6000 RPM.

Brüel & Kjær

WORLD HEADQUARTERS: DK-2850 Nærum · Denmark · Telephone: +45 2 80 05 00 · Telex: 37316 bruka dk · Fax: +45 2 80 14 05

Australia (02) 450-2066 · Austria 02235/7550*0 · Belgium 02·242-97 45 · Brazil (011) 246-8149/246-8166 · Canada (514) 695-8225 · Finland (90) 80 17 044
France (1) 64 57 20 10 · Federal Republic of Germany (04106) 4055 · Great Britain (01) 954-2366 · Holland 03 402-39 994 · Hong Kong 5-487486 · Italy (02) 52 44 141
Japan 03-438-0761 · Republic of Korea (02) 554-0605 · Norway 02-78 70 96 · Portugal (1) 65 92 56/65 92 80 · Singapore 225 8533 · Spain (91) 268 10 00
Sweden (08) 711 27 30 · Switzerland (042) 65 11 61 · Taiwan (02) 713 9303 · USA (508) 481-7000 · Local representatives and service organisations world-wide

Printed in Denmark by Nærum Offset