Brüel & Kjær

Technical Review

Teletechnical, Acoustical and Medical Research

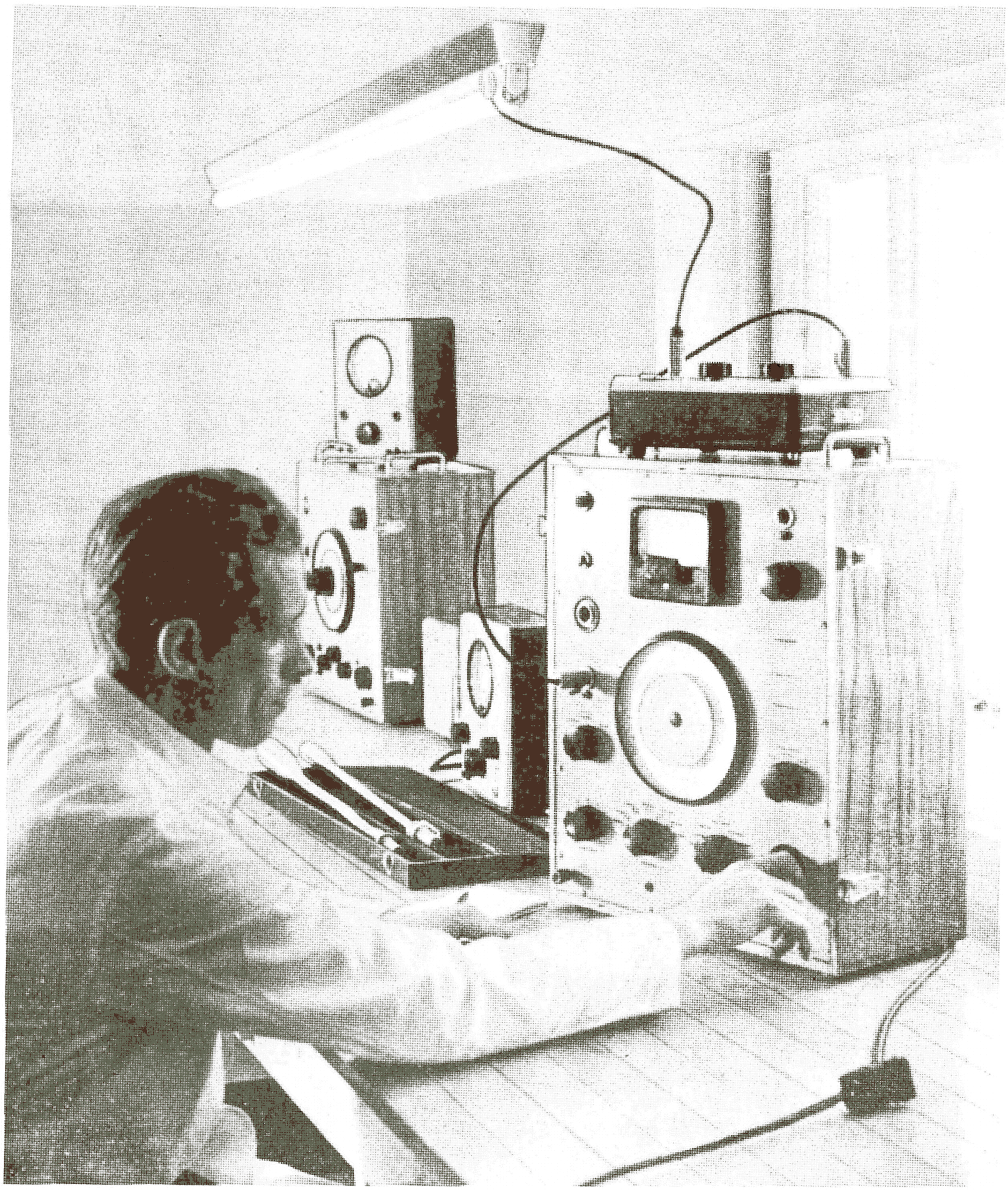

No. 1 January 1952

Cover: Measurement of vibration of ballast and mounting for a fluorescent tube.

Measurements on Fluorescent Tubes

The investigation of noise, vibration, light-modulation and current distortion in fluorescent lighting, by means of a Frequency Analyzer.

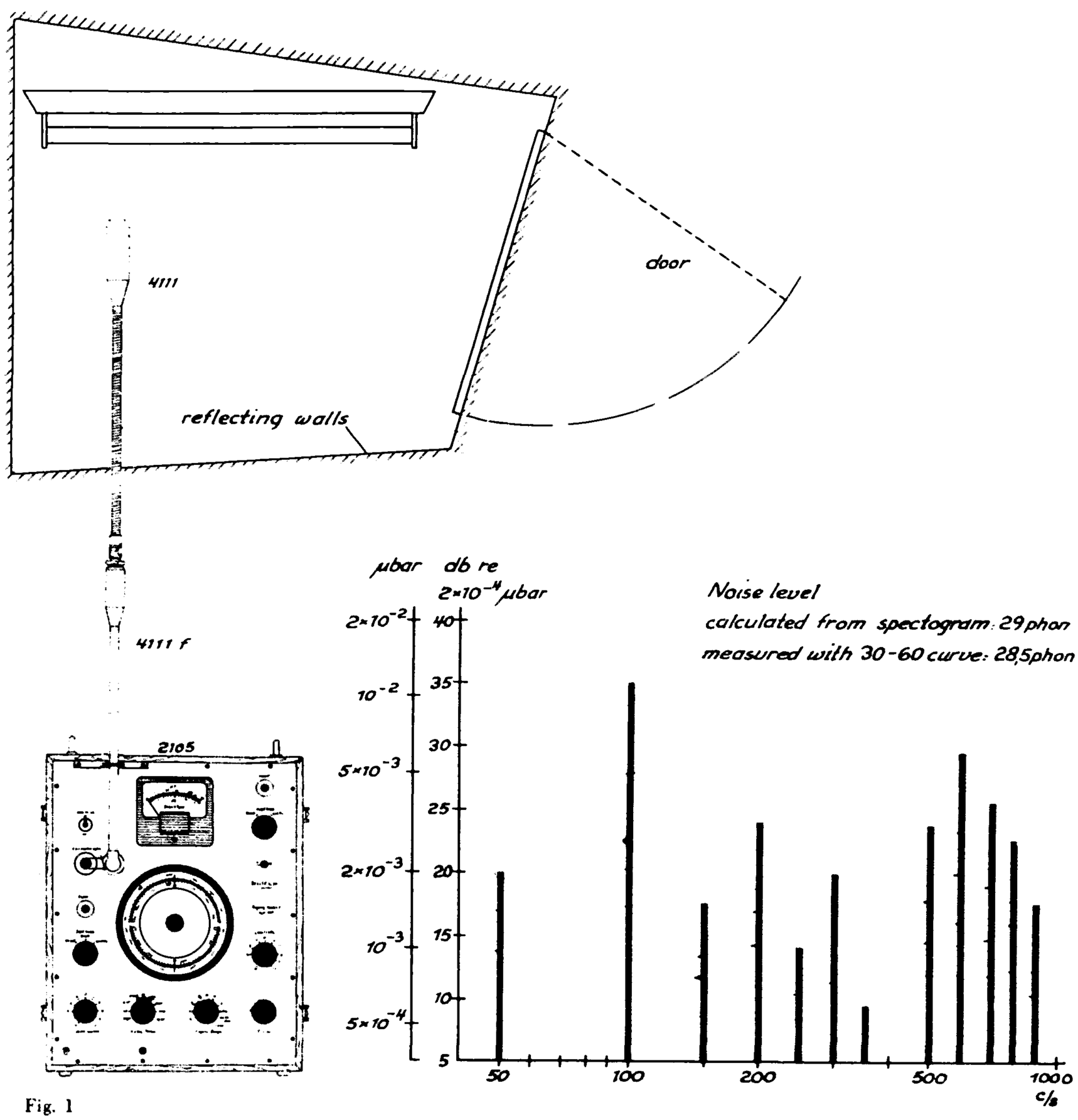

Fig. 1

In various European countries the government departments for the examination and approval of electrical equipment for use with the mains supplies have begun to take an interest in a closer investigation of fluorescent lighting, and have found that a number of these investigations can be carried out with a set-up in which a Frequency Analyzer is the chief test equipment.

As a result of these investigations it has been found so far that a Frequency Analyzer can advantageously be used for:

1) Analysis of the acoustical noise arising from the fluorescent tube, choke

and mounting. A precision microphone, for example a Condenser Microphone, can be used in connection with the Frequency Analyzer. Such a set-up is shown in fig. 1, which gives the results from a measurement with a fluorescent tube, with a mains frequency of 50 c/s. The fluorescent tube and accessories are placed in an oblique angled measuring container or small measuring room of about 2 m^3, with very hard sound reflecting walls of, for example, 10 cm thick concrete, lined internally with tiles. It is necessary to have the fluorescent tube and accessories in such a room, because the noise is as a rule so slight that it lies at the boundary of what is technically possible to measure. It is therefore necessary to use a measuring room such as mentioned above, where the acoustic effect can be heightened and external disturbances reduced to a satisfactory level.

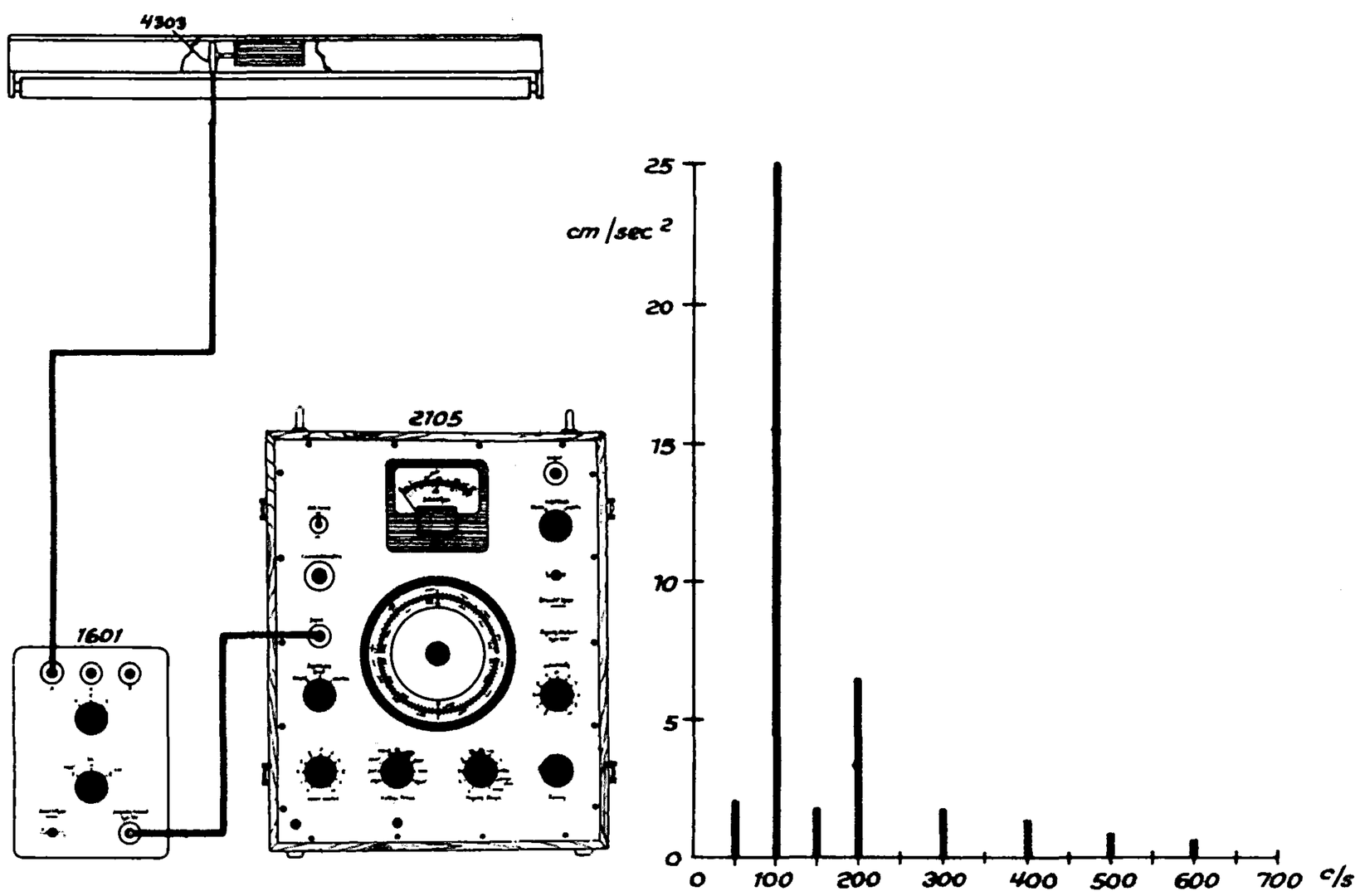

Fig. 2

2) The vibrations of the fluorescent tube ballast can be measured with a Vibration Pick-up, Integration-network and Frequency Analyzer, at in fig. 2, where the diagram shows that the integration-network has been used to measure the acceleration of the vibrations. If one so wishes, the Integration-network can be used to obtain a spectrogram of the velocity of the vibrations, or their amplitude, instead of their acceleration.

3) By using the analyzer in connection with a photocell the light modulation from a fluorescent tube can be examined. The light flicker produced when a fluorescent tube is operated on a.c. mains supply is frequently considered as the tube's great inconvenience as compared to a filament lamp. The flicker, caused by the current in the tube being interrupted twice in each mains cycle, is not of the same degree, and therefore not equally disturbing, for the different fluorescent coatings etc. used in the tubes, so that it is of interest to have diagrams of the light modulation for different tubes. Fig. 3 shows a set-up for such a measurement. The photocell is a selenium cell preferably

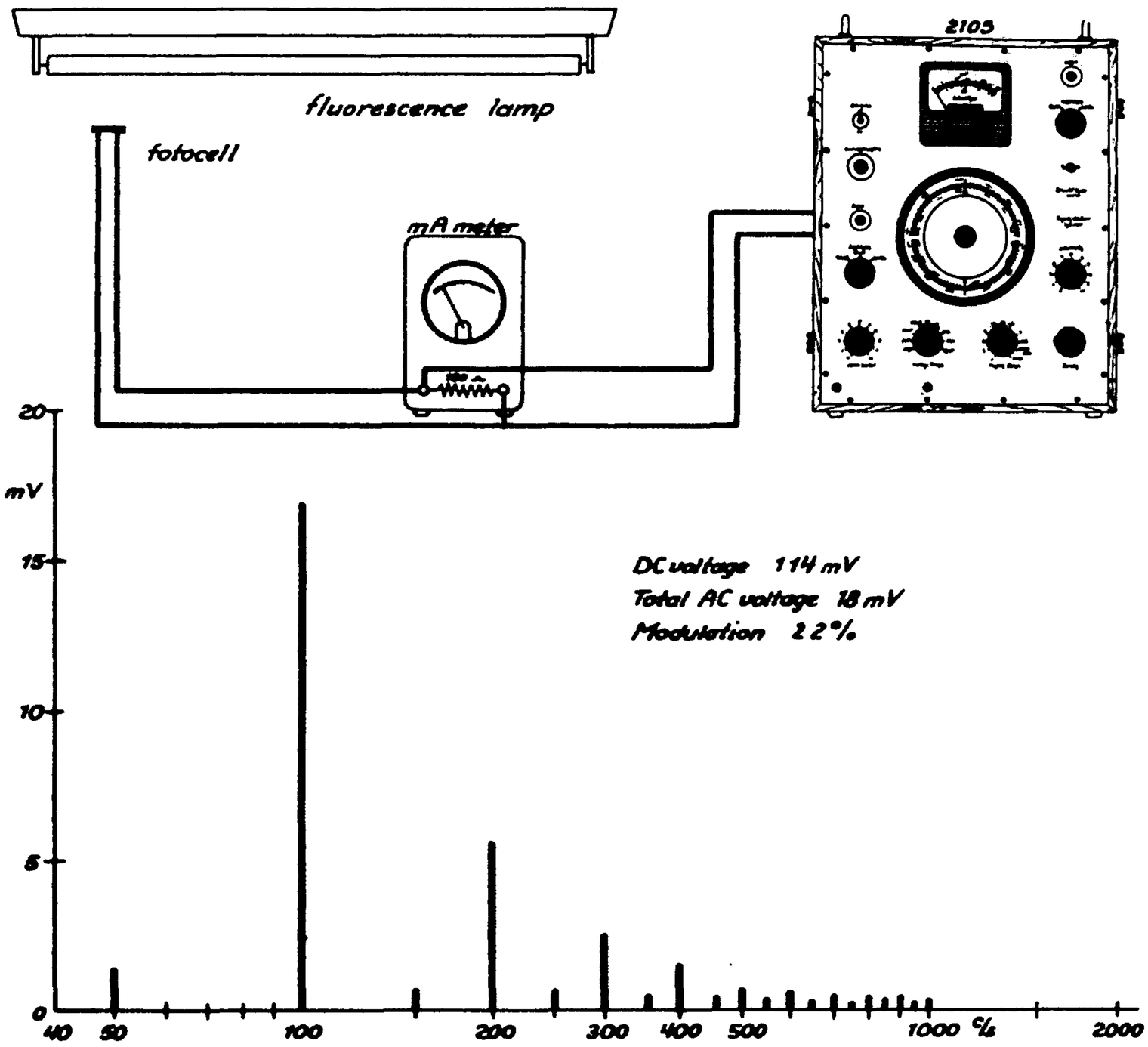

Fig. 3

working almost short-circuited, for example with a resistance of about 150 Ω In order to be able at the same time to measure the current from the photocell, the applied resistance can be the resistance in a milliammeter, as shown in the figure. At the same time the milliammeter can be used to measure the voltage across the shunt (in the example, 114 mV), as an indication of the total light emission from the fluorescent tube. The analyzer is coupled across the 150 Ω resistance to measure the a.c. components. It will be noted that the 100 c/s component is very powerful, and the 200 c/s component quite strong. On the whole, the even multiples of 50 c/s are more powerful that the uneven. By calculating the r. m. s. value of the components it will be found that the total of the alternating light components corresponds to 18 mV. The light is therefore in this case modulated 22 %.

4) Finally, the analyzer can be used to investigate the distortion of the electric current brought about by the above mentioned current interruption in the fluorescent tube twice in each cycle. The simplest set-up for this measurement is shown in fig. 4. The current to the fluorescent tube passes a resistance of 10 Ω which is used as a shunt for the analyzer and which

gives a suitable voltage drop for the analyzer. The diagram to the right of the set-up shows all the possible components which can be measured in this way, as none of the higher components is over 1 %, and thus cannot be registrered with the set-up as shown. If, however, one wishes to measure the higher components, a filter can be used which will cut out the 50 c/s mains frequency from the analyzer. The record shown underneath in fig. 4 will thus be obtained. With suitable equipment it is possible to measure the odd components and some of the even components right up to 750 cycles/sec.

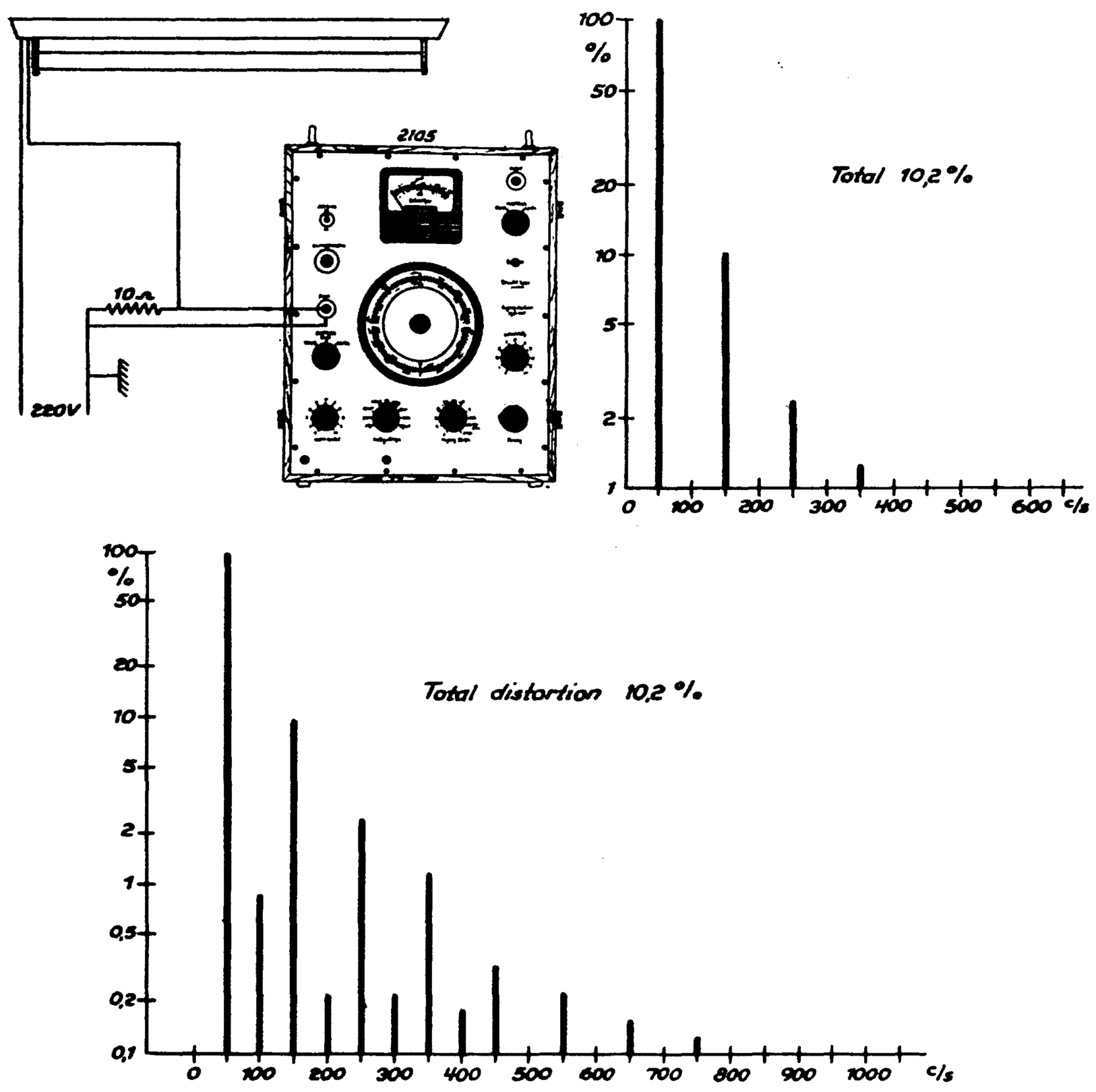

Fig. 4

The 750 c/s component is of the order of magnitude of 1 ‰, corresponding to about 1 % of the 150 c/s component.
The total distortion can be directly measured or calculated by r. m. s. addition. There are of course a number of different types of analyzers which can be used for these investigations, but as will be seen from what follows, the analyzer and accessories manufactured by Brüel & Kjær in standard form is not only particularly suited to these measurements, but just because the B. & K. equipment is of standard construction it is naturally also very suitable for a multiplicity of other investigations.

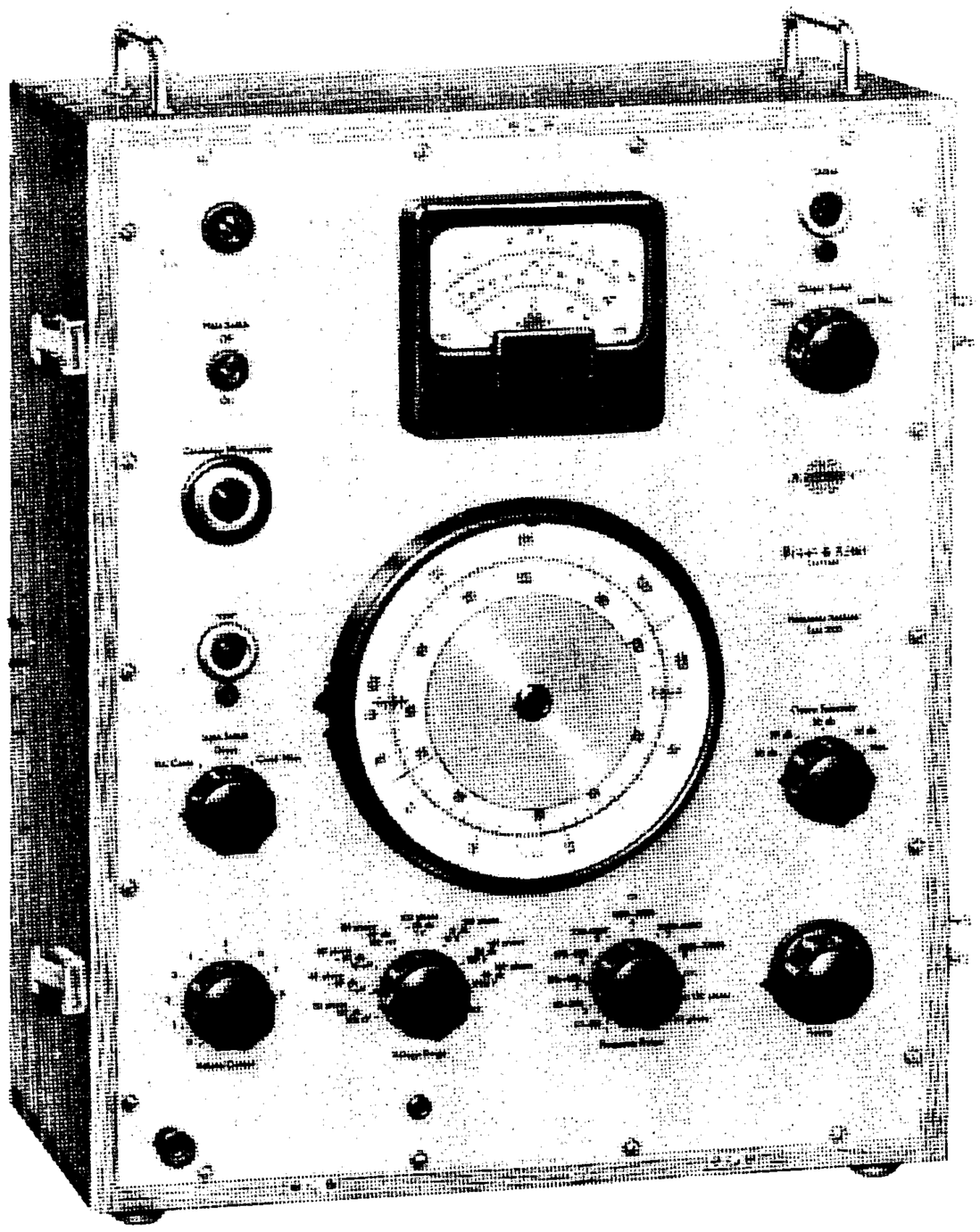

Fig. 5

Fig. 5 shows the Frequency Analyzer (type 2105), series no. above 3370). Besides the four above mentioned and associated investigations, the analyzer can for example be used as a selective amplifier for measuring reverberation times, and can also with great advantage be used for purely electrical measurements, for example as indicator in bridge measurements, where its great selectivity can in many cases be suitably exploited. In power engineering technique, when measuring for example dielectric losses in cables with a SCHERING bridge, a vibration galvanometer is usually employed, but as this is often not sensitive enough, it will be an advantage in such cases to replace it or supplement it with the Frequency Analyzer.
The Brüel & Kjær Frequency Analyzer is a very selective tube voltmeter, consisting of a 4-stage amplifier with a moving coil instrument. The measuring ranges cover from a 100 microvolts full deflection to 1000 volts full deflection. There are 8 frequency ranges from 47 to 12000 c/s. The exact frequency is adjusted and read on the main scale. Used as a linear amplifier or analyzer, the amplification is constant to ± 1 db from 30 to 15000 c/s, except with maximum selectivity, where the accurcy is a little less. Even after use over long periods the frequency accuracy is better than ± 1 %. The analyzer is driven from an a.c. mains supply of 115, 127, 150 or 220 volts, with a power consumption of about 40 watts. The analyzer works on the degenerative principle and has a constant percentage band width. The

block diagram of fig. 6 shows the principle used. Part of the output of two of the stages in the 4 stage amplifier is returned through a feed-back filter to the input, with such a phase shift that all frequencies with the exception of the filter's blocking frequency are very powerfully damped. The output is led to the moving coil meter whose deflection measures the selected frequency band's strength. The filter's pass range can be varied continuously to any desired frequency within the audible range.
Brüel & Kjær's Condenser Microphone type 4111 is well suited for use in connection with the analyzer, for example for the measurement of acoustic noise from fluorescent tubes previously mentioned. This microphone is specially constructed for measurements use and therefore has great stability and relatively small dimensions. The cartridge is constructed together

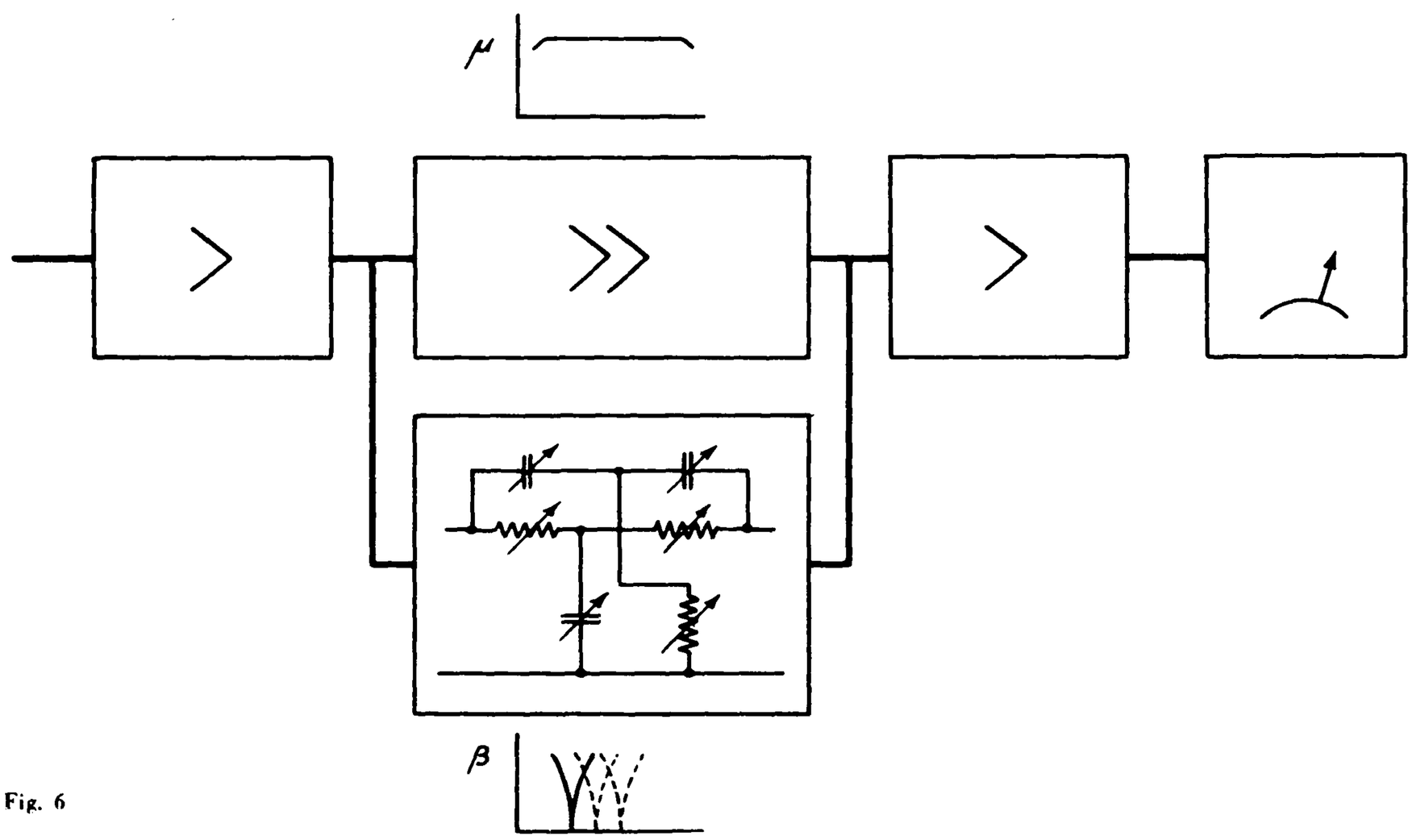

Fig. 6

with a cathode-follower tube to make it possible, if necessary, to have the microphone a good distance from the amplifier (which, for example, can be the analyzer).
All the necessary voltages to the microphone are taken from the amplifier, and all the connections between the microphone and amplifier are combined in one cable with a single plug connection. An extension cable is available on demand, normally in a 3 metre standard length. The frequency range is from 20 to 16000 c/s. The frequency response is linear to ± 2 db over the range 40 c/s to 10 kc/s in a free field. The minimum resonance frequency is 11000 c/s. Each microphone is individually calibrated over the entire frequency range from 20 to 16000 c/s, the calibration curve being supplied with the microphone. The accuracy of the curve is about 0.5 db over the range 30 c/s to 10000 c/s.
For the measurement of vibrations such as those previously mentioned Brüel & Kjær have produced a Vibration Pick-up (type 4303) and a correspon-

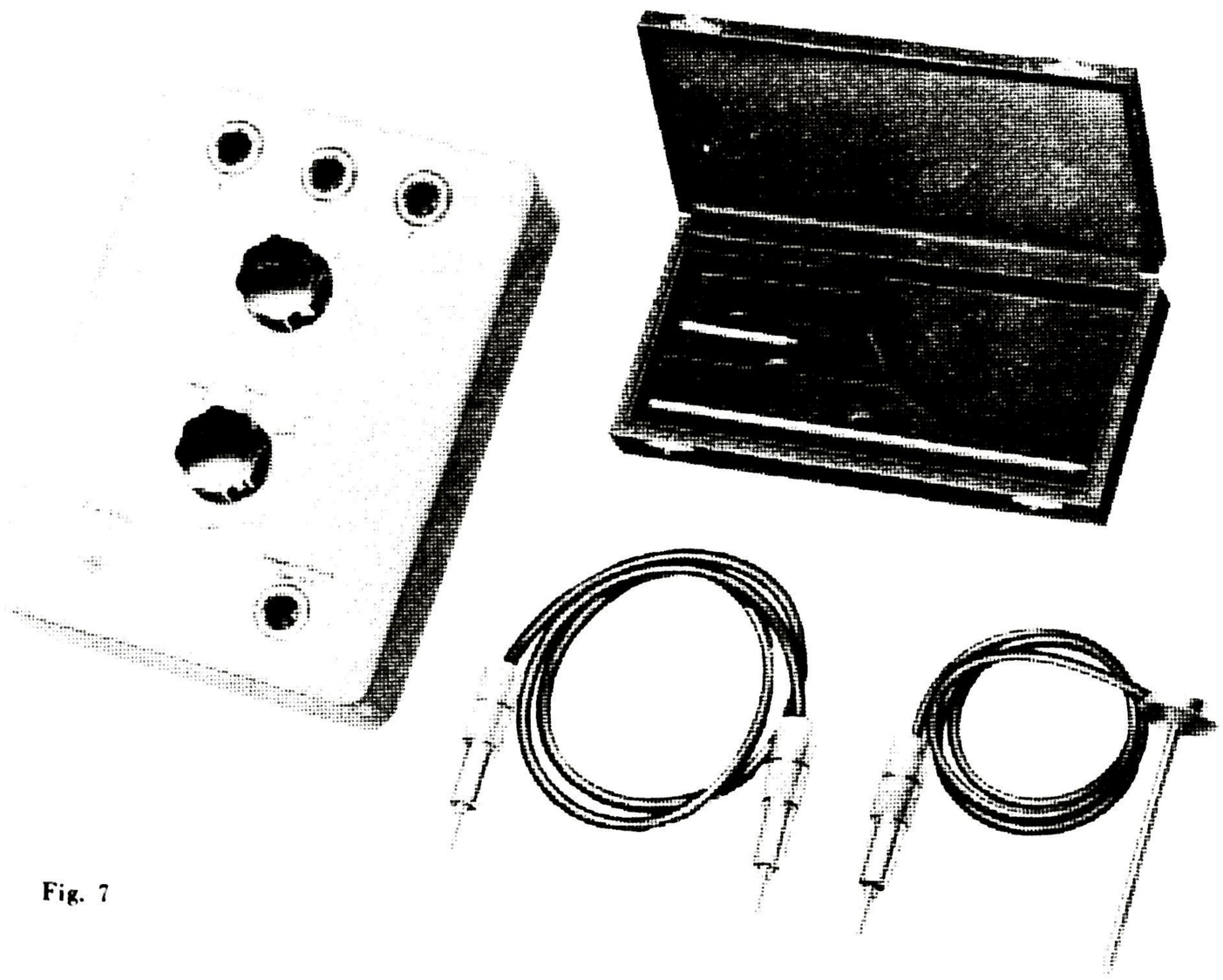

Fig. 7

ding Integration-network (type 1601) as shown in fig. 7. The pick-up consists of a piezo-electric crystal supported at three corners and loaded with a mass at the fourth corner. The integration-network is interposed between the pick-up and the frequency analyzer. The principle of the integration network is that of two R-C links, with an extra filter for partial compensation of the pick-up's resonance curve. The sensitivity (with the integration network interposed) is 50 mV per 1000 cmsec^{-2} for acceleration measurements, 5 mV per cmsec^{-1} for velocity measurements (that is, after one integration), and 500 mV per cm for deflection measurements, i.e., amplitude measurements (two integrations). As a certain accuracy is lost with each integration, it is naturally an advantage if acceleration measurements or if necessary velocity measurements can be used instead of amplitude measurements. The lover frequency limit lies under the analyzer's lower frequency limit, and the upper limit lies at about 1600 c/s.

This vibration pick-up and its accessories can of course be used for many other investigations than the above sketched investigations with fluorescent light tubes; for example, in the analysis of vibrations in buildings, ships and machines. In fact, with this equipment a wide range of investigations of both similar and essentially different problems can be carried out.

Editorial Notes.

Now that we have finished building our new factory, and have obtained undisturbed working conditions and good accommodation, we intend to send out Brüel & Kjær's "Technical Review of Teletechnical, Acoustical and Medical Research" regularly four times yearly.

Brüel & Kjær

ADR.: BRUEL & KJÆR
NÆRUM · DENMARK

CABLES: BRUKJA, COPENHAGEN
TELEPHONE: NÆRUM 105

Printed in Denmark