FiberSensing by HBK
HOTTINGER BRÜEL & KJÆR

ENGLISH

Mounting Instructions

FSOEM-1701

Pantograph Monitoring Solution

HBK FiberSensing, S.A.
Via José Régio, 256
4485-860 Vilar do Pinheiro
Portugal
Tel. +351 229 613 010
Fax +351 229 613 020
info.fs@hbkworld.com
www.hbkworld.com

Mat.:
DVS: A05955 03 E00 00
08.2025

© Hottinger Brüel & Kjaer GmbH

Subject to modifications.
All product descriptions are for general information only. They are not to be understood as a guarantee of quality or durability.

TABLE OF CONTENTS

1 General Information . . . 5
1.1 System architecture . . . 5
1.1.1 Components . . . 5
1.1.2 System take outs . . . 7

2 Regulatory and Certification Considerations . . . 8
2.1 Environment Considerations . . . 8
2.1.1 Disposal of your Old Appliance . . . 8
2.1.2 Packaging Disposal . . . 8
2.2 Certification EN45545 . . . 11
2.2.1 Fire Safety . . . 11
2.3 Marking used in this document . . . 11

3 Installation Procedure . . . 13
3.1 List of materials . . . 13
3.1.1 Included material per part number . . . 13
3.1.2 Needed additional equipment . . . 13
3.1.3 Needed additional material . . . 13
3.2 Introductory notes . . . 14
3.3 Installation of the components . . . 16
3.3.1 FS66HDL Heavy Duty Force Sensor . . . 16
3.3.2 FS65HDA Heavy Duty Accelerometer . . . 18
3.3.3 Interconnection Box . . . 20
3.3.4 Connection Cable . . . 23
3.3.5 Optical Interrogator MXFS . . . 23

4 Connections . . . 25
4.1 Sensors . . . 25
4.2 Interconnection box . . . 26
4.2.1 Main connector . . . 26
4.2.2 Spare connector . . . 26
4.3 Connection cable . . . 26
4.4 Cleaner kit . . . 27
4.5 MXFS QuantumX BraggMETER Interrogator . . . 28

5 Performing Measurements . . . 29
5.1 Starting a measurement in catman . . . 29
5.2 System assessment . . . 30
5.3 Sensor configuration . . . 31

5.4 Contact force and position 37
5.4.1 Contact Force 37
5.4.2 Position 38

6 System maintenance 40
6.1 Interrogators 40
6.2 Sensors 40
6.3 Cables 40
6.4 Connectors 40

1 GENERAL INFORMATION

The HBK Pantograph Monitoring Solution for Predictive Maintenance of Pantographs and Overhead Powerlines is a fully optical measurement system designed to be installed on regular operating trains, directly on the pantograph.

This solution can be used for the following applications:

- Predictive overhead line maintenance based on continuous data retrieving from regular trains;
- Contact force computation for pantograph control according to EN50317;
- Testing and homologation of pantographs.

HBK Pantograph Monitoring Solution is a completely passive solution that can safely operate on high voltage environments as found on the surroundings of the overhead power lines. HBK provides the complete setup, fitting the customer's needs from sensor to software, including the integration with vehicle bus signals allowing full mapping of damage extension, location, and frequency. This allows for smart cost reduction by planning and preventing unnecessary maintenance.

1.1 System architecture

The FSOEM-1701 Pantograph Monitoring Solution is based on force and acceleration optical sensors that are passive and safe for accurate measurements on high-voltage environment.

1.1.1 Components

A typical system contains:

- 4 FS65HDA Heavy Duty Accelerometers
- 4 FS66HDL Heavy Duty Force Sensors
- 1 Interconnection Box
- 1 Connecting Cable (or 2 for redundancy)
- 1 MXFS QuantumX BraggMETER Module

Passive components (i.e., not including the optical interrogator) can be ordered as a package or individually. The interrogator must be ordered separately.

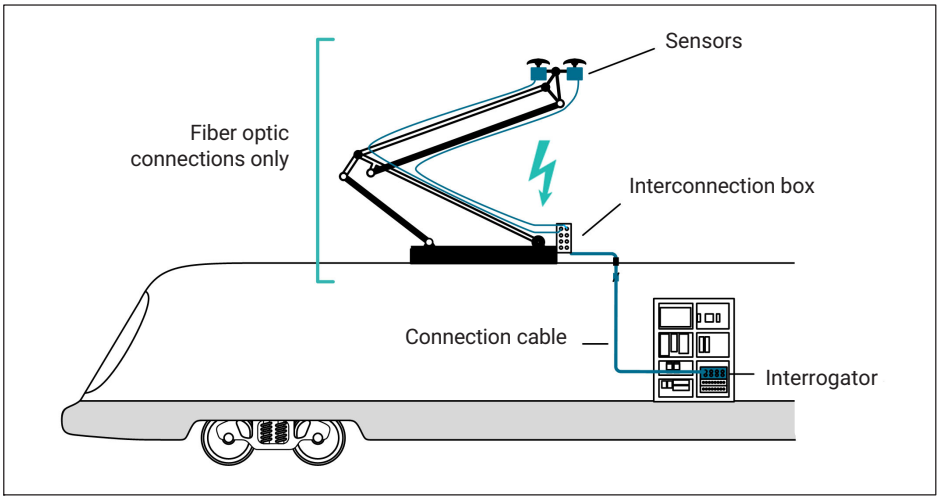

Fig. 1.1 Typical system architecture

Information from vehicle bus signals and GPS can also be used to build a graphical map of the infrastructure and its maintenance plan. By using this hybrid integrated system the owner can continuously assess the overhead power line condition and plan for maintenance on demand instead of performing periodic track interruptions for maintenance.

System weight on pantograph

Type	Unit weight	Qty	Total weight	Comment
Accelerometer	34 g	4	136 g	
Mounting screws and washer accelerometer	Custom	12	Custom	Depends on the exact type of screws chosen
Force sensor	90 g	4	360 g	
Mounting plate force sensor	Custom	4	Custom	Mounting plate to be designed and manufactured preferably by the pantograph owner
Mounting bolts and washer force sensor	Custom	16	Custom	Depends on the exact type of bolts chosen
Sensor cable	55 g/m	8	440 g	Rough estimate[1)]
Plastic cable ties			<10 g	Rough estimate[1)]

[1)] The exact amount of cable fastened to the pantograph will be decided at installation time.

Notice

Connection box and cable are mounted to the roof and not on the pantograph, hence weight is not referred.

1.1.2 System take outs

With a typical system as described above one can measure:

- Vertical contact force
- Vertical acceleration
- Position of contact line (zigzag movement)

2 REGULATORY AND CERTIFICATION CONSIDERATIONS

2.1 Environment Considerations

2.1.1 Disposal of your Old Appliance

When the attached symbol combination - crossed-out wheeled bin and solid bar symbol is attached to a product it means the product is covered by the European Directive 2002/96/EC and is applicable in the European Union and other countries with separate collection systems. All electrical and electronic products should be disposed of separately from the municipal waste stream or household via designated collection facilities appointed by the government or the local authorities. The correct disposal of your old appliance will help prevent potential negative consequences for the environment and human health.

For more detailed information about disposal of your old appliance, please contact your city office, waste disposal service or distributor that purchased the product. HBK FiberSensing is a manufacturer registered in the ANREEE - "Associação Nacional para o Registo de Equipamentos Eléctricos e Electrónicos" under number PT001434.
HBK FiberSensing celebrated a "Utente" type contract with Amb3E - "Associação Portuguesa de Gestão de Resíduos de Equipamentos Eléctricos e Electrónicos", which ensures the transfer of Electrical and Electronic appliance waste management, i.e., placing Electronic and Electrical appliances in the Portuguese market, from the manufacturer HBK FiberSensing to Amb3E.

2.1.2 Packaging Disposal

The packaging of this equipment is designed to protect it from damage during transportation and storage. It is also made of materials that can be recycled or reused, in accordance with the European Union’s waste management regulations to minimize its environmental impact.

If you plan to move your equipment to different locations it is advisable that you keep the original package for reuse. This will not only grant proper protection for transportation, but also ensure the reduction of waste creation.

Packing boxes include a label with information on the materials used on that specific package.

Fig. 2.1 Packing label example

Please follow the instructions below to dispose of the packaging properly and responsibly and contribute to the preservation of our planet. Thank you!

To dispose of packaging, you should:

- Remove any labels, adhesives, nails, staplers or caps that are not part of the same material.
- Rinse the packaging with water to remove any residues or dirt.
- Flatten or fold the packaging to reduce its volume and save space (except for glass that should not be crushed).
- Separate the packaging by material and place it in the appropriate recycling bin or bag.

Most of our packing are made of paper and plastic and aimed to be reused or recycled, but they are not appropriate for food containing. Please consult the chapter “Packing Symbols” for more detailed information about the packing materials used by HBK FiberSensing, marked in the packing label of each product delivered to customers.

Packaging Symbols

Packing materials are marked with the correspondent symbol for guidance.

Not appropriate for food

Recyclable

The recycling symbols for the different materials include numbers and letters that identify the material type. For example, PET (polyethylene terephthalate) is marked also with the number 1, and PE-HD (high-density polyethylene) is marked with the number 2. For paper (PAP) 20 corresponds to corrugated cardboard and 22 to paper as seen in newspapers, books,...

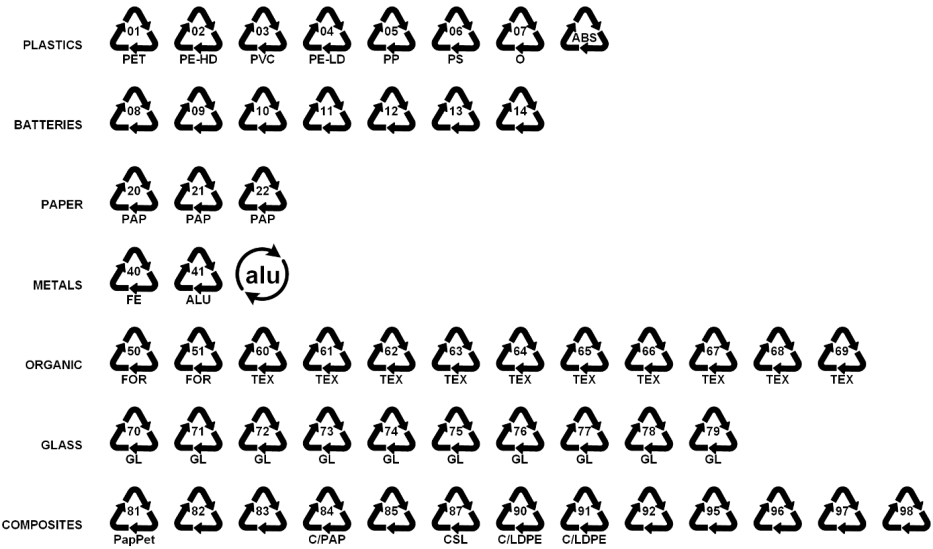

Fig. 2.2 Recycling symbols

Plastics

Plastic packaging materials are commonly bags, films, trays, blisters or containers.

Batteries

Batteries are not part of the packaging, but they may be included in the equipment or its accessories. Please refer to section 2.1.1 Disposal of your old appliance for more information.

Paper

Paper packaging materials are commonly boxes, cartons, envelopes, or labels.

Metals

Metal packaging materials are commonly cans, foils, caps, or wires.

Organic

Organic packaging materials could be wood, cork, or cotton and are made of natural or biodegradable materials that can be composted or reused.

Glass

Glass packaging materials are bottles, jars, or vials.

Composites

Composite packaging materials are made of layers of different materials, such as paper, plastic, and aluminum. They are marked with a recycling symbol and a letter that indicates the composition of the packaging. For example, PAP is for paper and plastic, and ALU is for aluminum.

2.2 Certification EN45545

Information

Please refer to MXFS QuantumX BraggMETER Module user manual for more information on the certification and regulatory information about this product.

2.2.1 Fire Safety

The passive components from the Pantograph Monitoring Solution - sensors, cables and boxes – comply with the fire requirements according to the criteria established in the test specifications of EN 45545-2:2020, hazard level HL3 (for any type of railway vehicle).

2.3 Marking used in this document

Important instructions for your safety are specifically identified. It is essential to follow these instructions to prevent accidents and property damage.

Symbol	Significance
⚠ **CAUTION**	This marking warns of a *potentially* dangerous situation in which failure to comply with safety requirements *can* result in slight or moderate physical injury.
Notice	This marking draws your attention to a situation in which failure to comply with safety requirements *can* lead to damage to property.
Important	This marking draws your attention to *important* information about the product or about handling the product.
Tip	This marking indicates application tips or other information that is useful to you.
Information	This marking draws your attention to information about the product or about handling the product.

Symbol	Significance
Emphasis *See …*	Italics are used to emphasize and highlight text and identify references to sections, diagrams, or external documents and files.
▶	This marking indicates an action in a procedure

3 INSTALLATION PROCEDURE

3.1 List of materials

3.1.1 Included material per part number

Part number	Material
1-FSOEM-1701	4 FS66HDL Heavy Duty Force Sensors 4 FS65HDA Heavy Duty Accelerometers 1 Interconnection Box 1 Connecting Cable 1 Cleaner kit (Cleaner A and B)
1-FSOEM-1701-01-01	1 FS66HDL Heavy Duty Force Sensor
1-FSOEM-1701-02-01	1 FS65HDA Heavy Duty Accelerometer
1-FSOEM-1701-03-01	1 Interconnection Box
1-FSOEM-1701-04-01	1 Connecting Cable
1-FSOEM-1701-05-01	1 Cleaner kit (Cleaner A and B)
1-MXFS8DI1/FC	1 MXFS QuantumX BraggMETER Module with catmanEasy license

3.1.2 Needed additional equipment

Torque wrenches/screw drivers in accordance to the selected screws and recommended torques.
PC (e.g., 1-CX22B)

3.1.3 Needed additional material

M8 bolts, length respecting minimum 12 mm of thread engagement length (4 per FS66HDL)
M3 bolts, length respecting minimum 6 mm of thread engagement length and flat washers (3 per FS65HDA)
M4 countersunk bolts, length respecting minimum 8 mm of thread engagement length (dependent on hole depth on the custom designed bracket; 4 per box)
Mounting brackets for FS66HDL (custom designed)
Mounting brackets for Interconnection box (custom designed)

UV resistant cable ties for securing cables (e.g., HellermannTyton 111-05400)
MXFS power supply (e.g., 1-NTX001)
Ethernet cable (e.g., 1-KAB239-2)

3.2 Introductory notes

Sensors are normally installed in 4 locations for measuring Force + Acceleration.

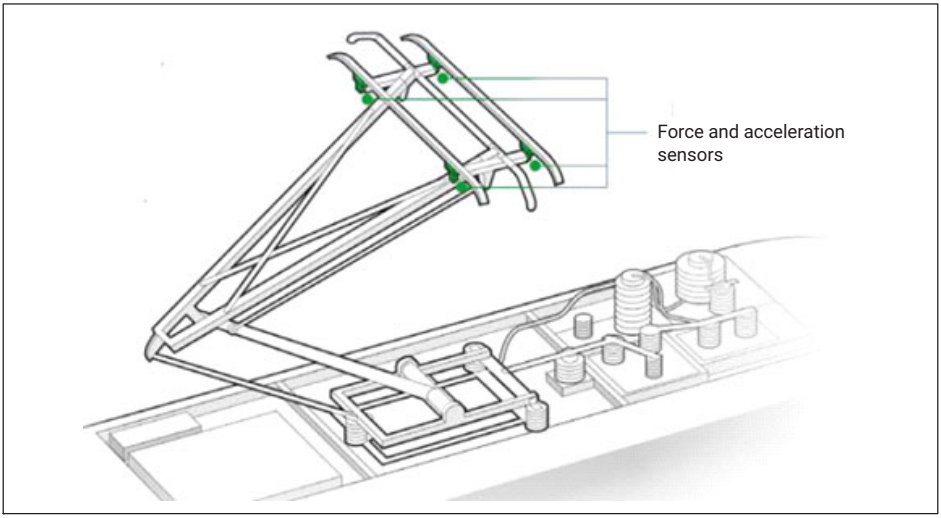

Fig. 3.1 Typical Sensor Location

Important

Some preparation work should be performed in advance, namely:

- Designing and preparing installation brackets for Force sensors and Connection Box.
- Securing that there is a roof feedthrough available for the M40 gland from the Connection Box.

This should be the customer's responsibility as there are many different pantographs and regulations to which are unknown to HBK.

Tip

It is recommended to test the installation of the sensors on an unmounted pantograph previous to installation on the train pantograph.

⚠ CAUTION

Please consider any grounding connections needed. No further instructions are given as requirements may differ for the different pantograph models and train operators.

When mounting the pantograph sensors, please pay attention to the following:

- Please handle with care.
- The pantograph sensors are precision sensors and so their achievable accuracy highly depends on correct mounting.
- Do not overload the sensors.
- Avoid lateral forces or torque.
- The sensors are very light when compared to the cables. Handle the cables with care before fixing to avoid damage.
- Nuts from the cable exiting from the sensors are part of the sensors' body and must not be unfastened.

Notice

The sensors for the pantograph monitoring system are precision measuring elements and need to be handled carefully. Dropping or knocking the transducers may cause permanent damage. Make sure that the transducer cannot be overloaded, including while it is being mounted.

3.3 Installation of the components

3.3.1 FS66HDL Heavy Duty Force Sensor

The FS66HDL Force Sensors are to be mounted with bolts as illustrated below.

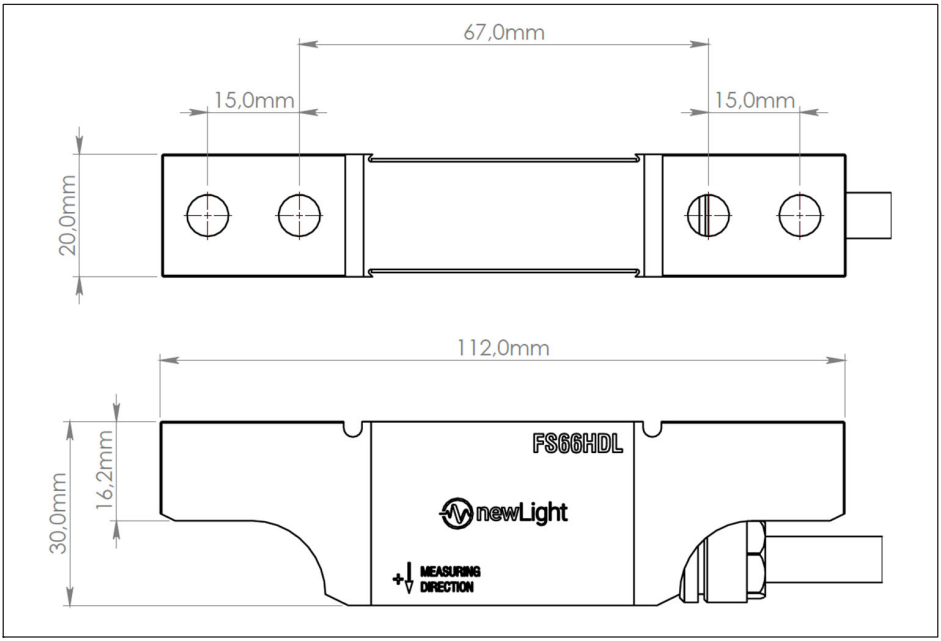

Fig. 3.2 FS66HDL Heavy Duty Force Sensor technical drawing (dimensions in mm)

Custom made brackets

As the pantograph models differ, the brackets for mounting these sensors must be custom made.

Brackets must be such that load vector is ensured to be centered with the sensor. In *Fig. 3.3* a scheme of the brackets and respect of loading position is presented.

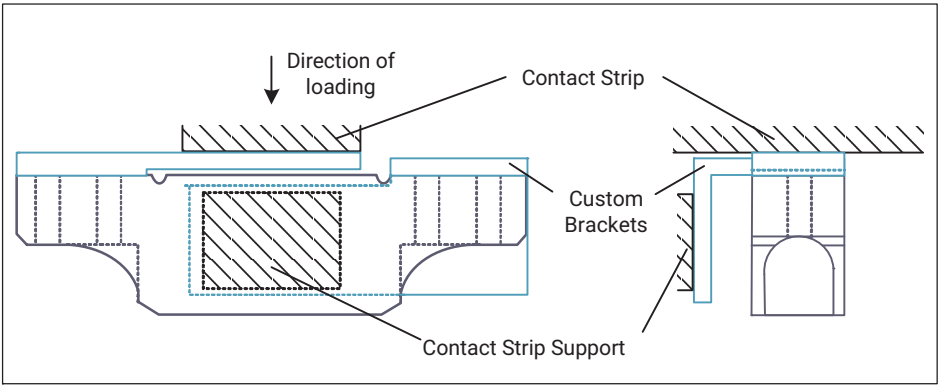

Fig. 3.3 FS66HDL Force Sensor mounting brackets schematics

An example of a Force Sensor installed on a pantograph structure is shown.

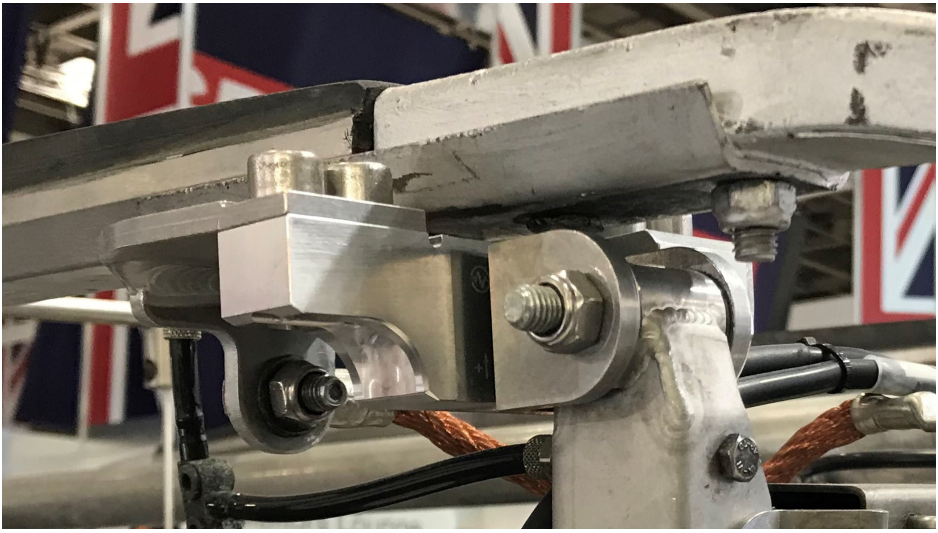

Fig. 3.4 FS66HDL Force Sensor mounted with custom designed brackets

Important

It is highly recommended that the owner of the pantograph performs this task since this part requires significant insight of the structure. In this way, the risk of errors, misunderstandings and delays is minimized.

Mounting

The force sensors are mounted on the pantograph with 4 pcs M8 bolts using the bracket as described before. It is recommended to use M8 bolts with a strength of 10.9 and a tightening torque of 30-35 Nm. The bolts should be made of zinc-plated steel. The thread engagement length must be at least 12 mm. The use of Loctite 243 or equivalent thread locker is suggested in-case of high vibrations or permanent installation.

Fig. 3.5 Mounted FS66HDL Force Sensor on a pantograph

Cable routing

The cables from the sensors must be routed to the interconnection box. The cable should be attached to the pantograph using UV-resistant cable ties (e.g., HellermannTyton 111-05400).

Tip

The exact routing of the cable must be decided together with the pantograph owner to ensure the cables have enough slack to allow pantograph movement and to avoid damage or interference with the operation.

3.3.2 FS65HDA Heavy Duty Accelerometer

Mounting

The FS65HDA Accelerometers are also to be mounted with bolts as illustrated below. Each accelerometer is mounted on the pantograph with three M3 screws with suitable

flat washers and an thread engagement length of at least 6 mm. It is recommended to use M3 screws with a class of 10.9 and a tightening torque of 1.5-2 Nm. The screws should be made of zinc-plated steel. The use of Loctite 243 or equivalent thread locker is suggested in-case of high vibrations or permanent installation.

Information

The exact location of the accelerometer must be confirmed with the pantograph owner to avoid errors.

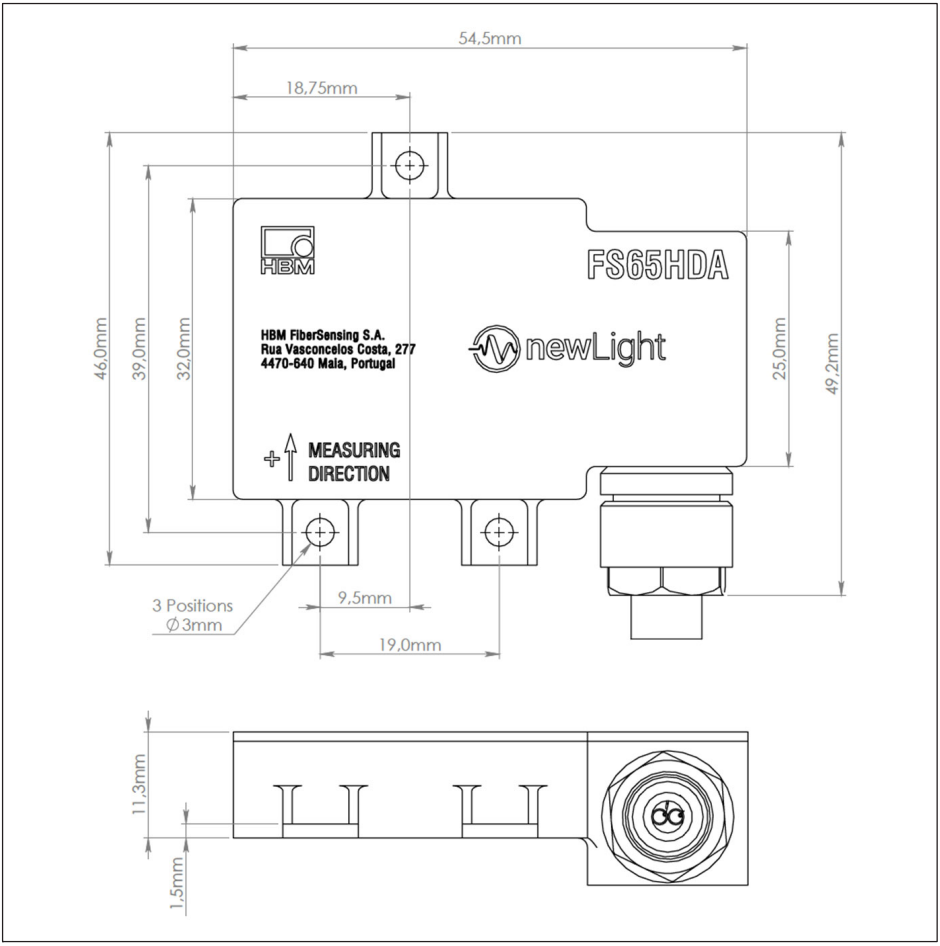

Fig. 3.6 FS65HDA Heavy Duty Accelerometer technical drawing (dimensions in mm)

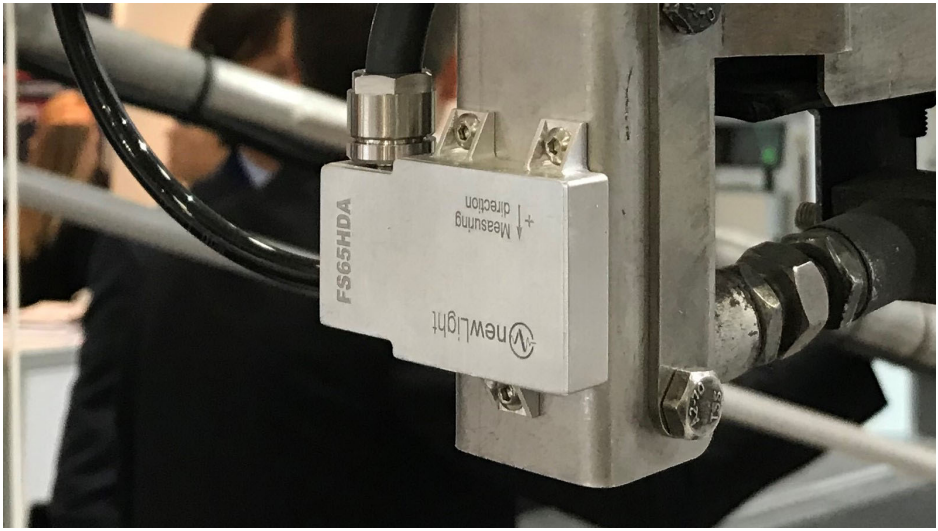

Fig. 3.7 Mounted FS65HDA Accelerometer on a pantograph

Cable routing

The cables from the sensors must be routed to the interconnection box. The cable should be attached to the pantograph using UV-resistant cable ties (e.g., HellermannTyton 111-05400).

Tip

The exact routing of the cable must be decided together with the pantograph owner to ensure the cables have enough slack to allow pantograph movement and to avoid damage or interference with the operation.

3.3.3 Interconnection Box

The interconnection box merges signals from all sensors into one single cable that ensures insulated signal transmission to the interior of the train. For this purpose, the cable path that is kept outside the train, between the box and the gland, is protected with a thick PTFE tube.

Two connectors are provided at the cable end for redundancy: in the nominal case of having no fibers failures on the system, connection of only one of these connectors will be sufficient.

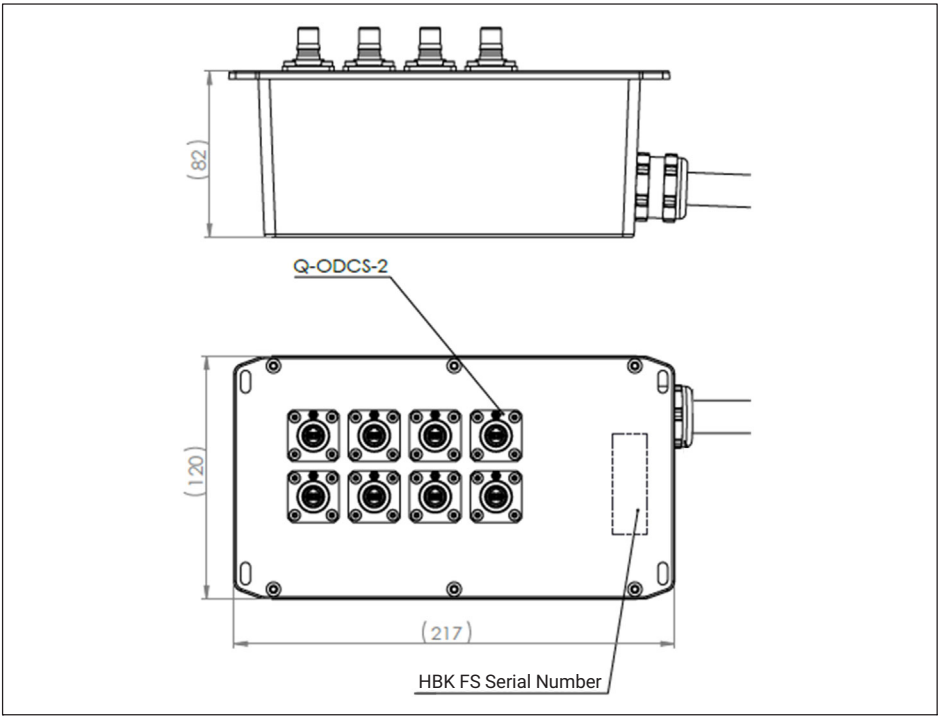

Fig. 3.8 Interconnection Box – Box side – technical drawing (dimensions in mm)

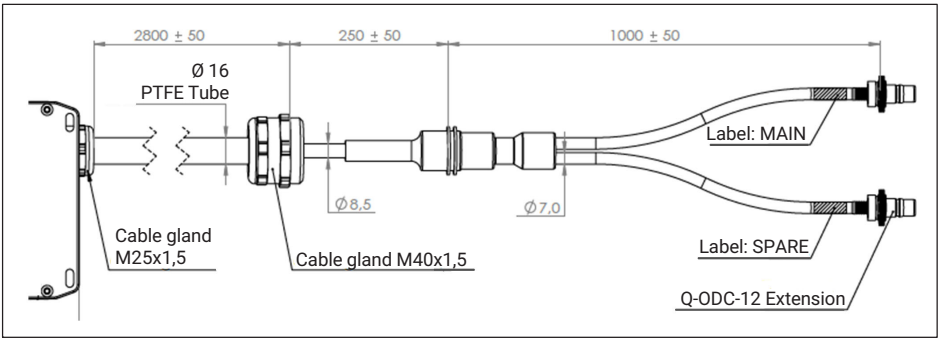

Fig. 3.9 Interconnection Box – Cable side – technical drawing (dimensions in mm)

Custom made brackets

As pantograph models differ, a standard bracket for mounting the box is not available and it should be custom made.

Information

It is highly recommended that the owner of the pantograph performs this task since this part requires significant insight of the structure. In this way, the risk of errors, misunderstandings and delays is minimized.

Mounting

The box is mounted with 4 pcs M4 bolts using the bracket as described above. It is recommended to use M4 countersunk bolts with minimum length of 12mm, but this value is dependent on hole depth on the bracket. It is recommended to use M4 bolts with a class of 10.9 and a tightening torque of 4 Nm. The bolts should be made of zinc-plated steel. The use of Loctite 243 or equivalent thread locker is suggested in-case of high vibrations or permanent installation.

Roof gland

A roof gland (number **1** in *Fig. 3.10*) must be arranged with the owner of the train. It is recommended that the person performing this job has access to the actual cable gland, to be sure that the right size gland is used.

Information

The roof gland must be arranged with train owner prior to installation.

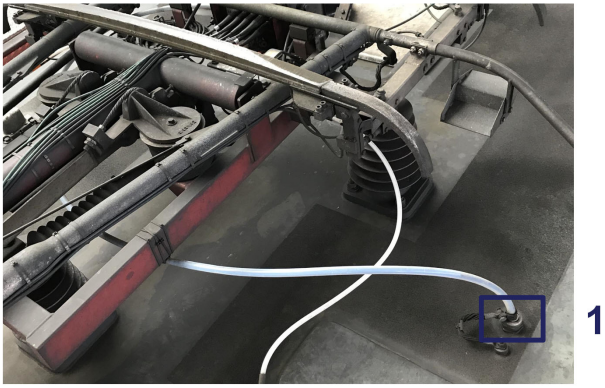

Fig. 3.10 Roof gland

Cable routing

The cable from the box must be routed to the roof gland. The cable should be properly fixed using UV-resistant cable ties (e.g., HellermannTyton 111-05400).

The cable breakout side is inserted through the gland inside the train and the PTFE outer tube secured with the M4x1.5 cable gland.

Inside the train the cables should be routed through convenient paths to the location of the data acquisition system.

3.3.4 Connection Cable

The connection cable ensures the connection of the sensor signals to the optical interrogator. It should be deployed and secured along convenient paths into the technical rack or measurement system location.

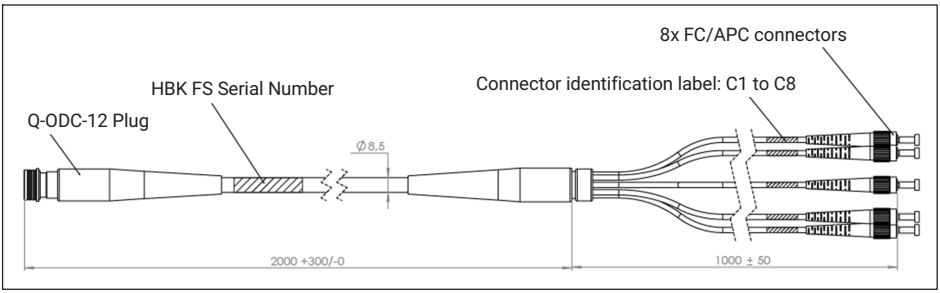

Fig. 3.11 Connection Cable technical drawing (dimensions in mm)

3.3.5 Optical Interrogator MXFS

The optical interrogator fitting the pantograph Monitoring system is the MXFS DI. This is a module part of the QuantumX family for Dynamic acquisitions of fiber Bragg grating based sensors. It operates at 100S/s or 2000S/s acquiring up to 128 FBG simultaneously.

For more details, please refer to the equipment's user manual document.

The simplest configuration considers the interrogator connected via Ethernet to a PC where catmanEasy is installed and running.

Fig. 3.12 catman software with MXFS

Important

MXFS DI EN45545 certification is valid for the interrogator without the X frame. Please refer to QuantumX user manual for details on removing the frame (A03031 available here).

4 CONNECTIONS

The system is prepared in a way that each sensor is connected to one optical connector of the interrogator. It is also prepared for the eventuality that a connection is broken by providing a spare fiber connection for the sensors that adds redundancy to the system – if a sensor is not reached from one side, it can be acquired from the other.

4.1 Sensors

On *Fig. 4.1* a scheme of the connections' layout is shown.

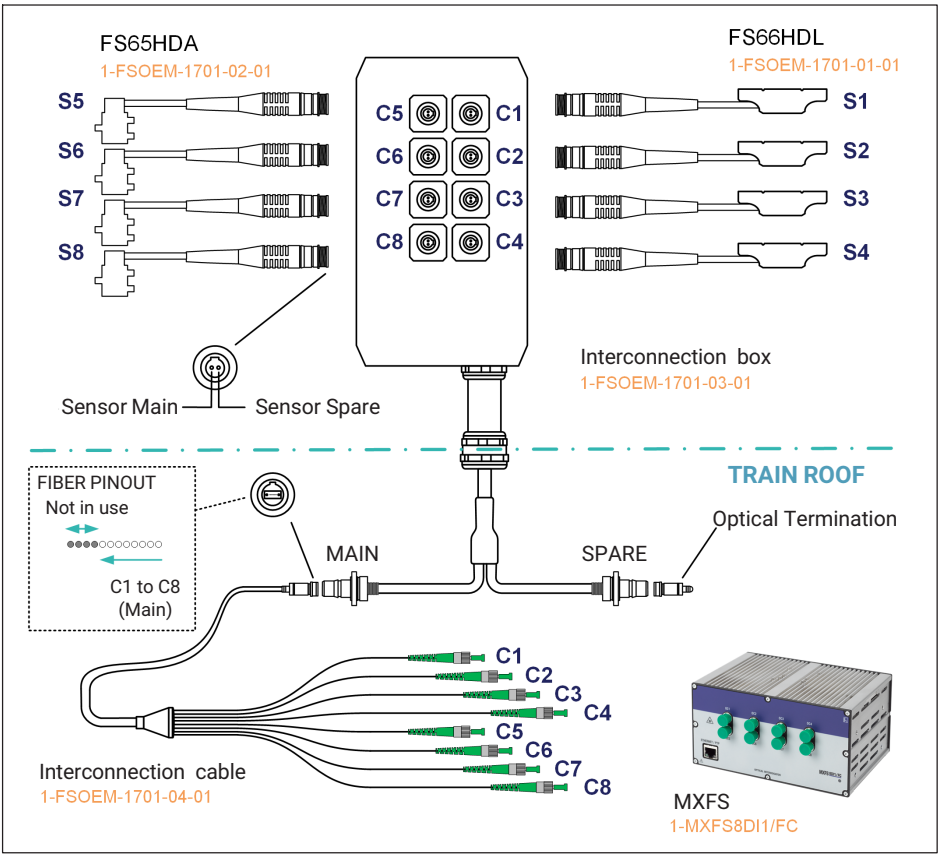

Fig. 4.1 Connection Scheme

Once the sensors are installed, they should be connected to the connection box. The order the sensors are connected to the box is flexible.

Tip

It is advisable to take note of which sensor is connected to each port, so that the relationship to the breakout cable connectors on the Connection Cable is known. Nevertheless, this is not essential as if there is access to the sensors it is easy to identify which connector corresponds to each sensor by acting on them while measuring.

4.2 Interconnection box

4.2.1 Main connector

The main connector should be sufficient to ensure the connection of all signals to the optical interrogator.

In case a connection from the main connector is lost, it may be recovered using the corresponding one on the spare connector.

4.2.2 Spare connector

The spare connector on the connection box is delivered with an optical termination that ensures backscattered reflection on this end is avoided.

Important

Backscattering can diminish the system's visibility of the sensors and compromise measurements.

In case the spare connector is needed, remove the termination, and connect the additional Connection Cable (ordered separately, 1-FSOEM-1701-04-01)

4.3 Connection cable

Connect the connecting cable to the Main Connector from the Interconnection box.

Tip

In case the system is installed on a pantograph that is not mounted on the train yet, the connection cable can be used for checking the installation. Then it must be disconnected and connected back when the pantograph is installed on its final location.

On the breakout side, connect each FC/APC connector to an optical port of the MXFS DI interrogator.

4.4 Cleaner kit

A cleaner kit comprising two cleaners and accessories is delivered with the system.

- Cleaner A is to be used with Q-ODC-2 connectors (plug and socket) that are the ones used on the sensor-box connection.

Fig. 4.2 Cleaner A for Sensor Connectors and Interconnection Box Sensor plugs

- Cleaner B is to be used with Q-ODC-12 connectors (plug and socket) which materialize the connection between the box main or spare cable and the connection cable.

Fig. 4.3 Cleaner B for Interconnection Box Cable and Connecting Cable Connectors with Plug and Socket adapter

It is extremely important that connectors are cleaned every time they are handled to prevent dust to interfere with the connection quality. If not in use, connectors must be covered with the protective caps.

For more details on how to use these accessories to clean the connectors, please refer to the connector's supplier instructions: https://www.hubersuhner.com/fr-fr/documents-repository/installation-manuals/gen-handling-insp-cleaning/cleaning-instruction-fo-connectors

Tip

For cleaning FC/APC optical connectors from the connecting cable or on the interrogator, use the standard FS-CLEANER.

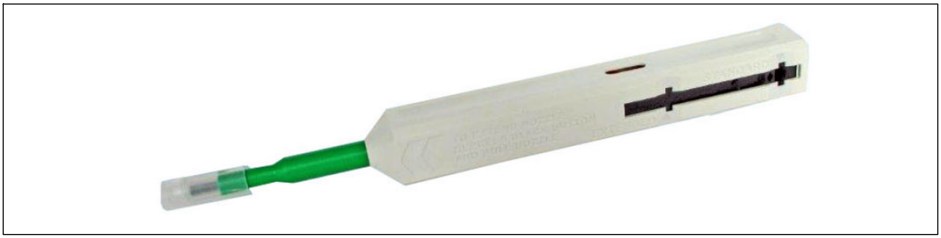

Fig. 4.4 Standard HBK Connector Cleaner (order number 1-FS-CLEANER)

4.5 MXFS QuantumX BraggMETER Interrogator

The optical interrogator has to be powered (e.g., through 1-NTX001) and connected to a PC (e.g., Ethernet) with catmanEasy software.

5 PERFORMING MEASUREMENTS

5.1 Starting a measurement in catman

Please refer to the device's user manual (A05566 available here) for detailed information on the process for starting a measurement.

- Configure the ranges by pressing the "Configure ranges" button.

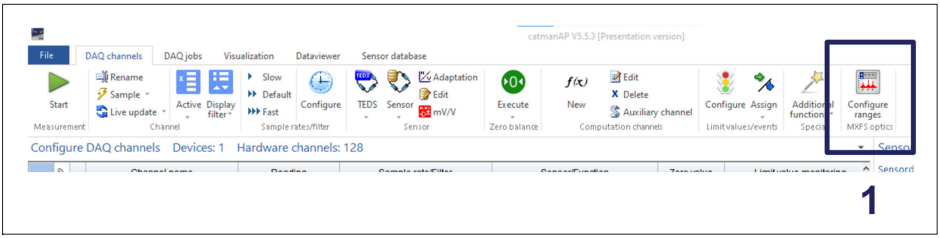

Fig. 5.1 Configure ranges button

- Define a width value for the band automatic creation of 9 nm (number **1** in *Fig. 5.2*).
- Perform an automatic creation of bands by pressing the "Create Button" (number **2** in *Fig. 5.2*).

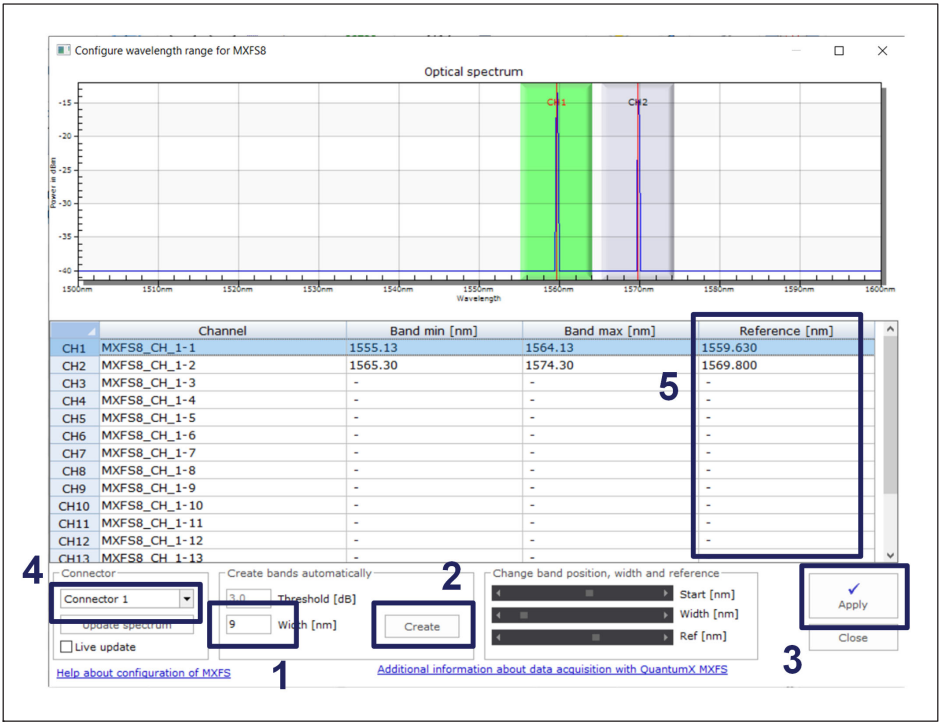

Fig. 5.2 Create ranges

- Apply the configured ranges to the device for the selected connector by pressing the “Apply” button (number **3** in *Fig. 5.2*).
- Repeat the process for all connectors, by changing the selected connector (number **4** in *Fig. 5.2*).

5.2 System assessment

After the correct band definition, the system can measure the sensors and the system connectivity can be tested.

The sensors can be checked by applying a small force by hand to each sensor and reading the result from the DAQ Software. In this way, each “channel number – sensor pair” is identified and the functionality of the sensor verified (number **1** in *Fig. 5.3*)

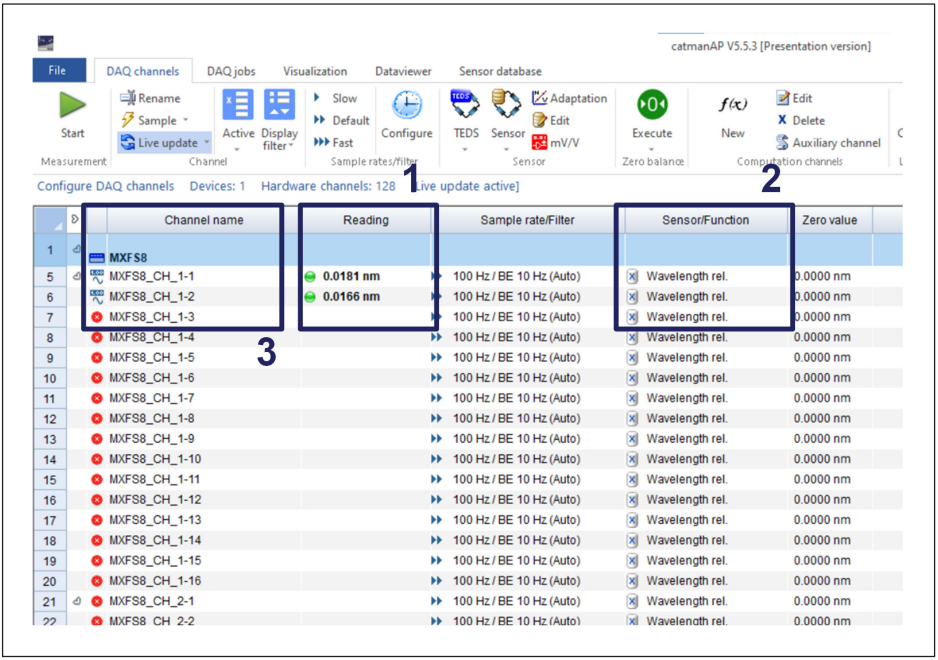

Fig. 5.3 System check and sensor identification

Tip

After the system assessment, the connection cable can be removed and the pantograph is ready to be mounted on the train.

5.3 Sensor configuration

The FS66HDL and FS65HDA sensors use 2 FBG in a push-pull configuration for canceling the temperature effect on the measurements. MXFS DI and catman software do not directly support optical sensors with dual FBG, so computational channels must be used in catman interface.

Each sensor is provided with a calibration sheet with the needed parameters and relevant formulas for configuration.

Both the FS66HDL and the FS65HDA have an absolute calibration value, meaning that reference wavelengths for each FBG must be the ones given on the calibration sheet. Calibration formula is a function of the variations of wavelengths of both FBG against these reference wavelengths.

Calibration Data

Reference wavelength @ 0g, λ_0 [nm]	
FBG1	1560.603
FBG2	1570.512
Calibration factor @100Hz, S [g/nm]	12.96

Sensor Data

Acceleration range [g]	[-20;20]
Frequency range [Hz]	[0; 200]
Maximum full scale error [%]	0.5

Configuration Equation

$$A = S \times \left[\left(\lambda_2 - \lambda_{02}\right)_{FBG2} - \left(\lambda_1 - \lambda_{01}\right)_{FBG1}\right]$$

Legend:

A: Acceleration [$g_{0\text{-}pk}$]

λ_{01}: Reference wavelength FBG_1 of the accelerometer [nm] @ RT
= Wavelength FBG_1 at zero instant (after installation)

λ_{02}: Reference wavelength FBG_2 of the accelerometer [nm] @ RT
= Wavelength FBG_2 at zero instant (after installation)

λ_1: Measured wavelength FBG_1 of the accelerometer [nm]

λ_2: Measured wavelength FBG_2 of the accelerometer [nm]

0g position: direction perpendicular to accelerometer main axis

RT: Room temperature

1g = 9,80665 m/s2

Fig. 5.4 FS65HDA Calibration Data Example

Calibration Data

Reference wavelength @ 0N, λ_0 [nm]	
FBG1	1579.342
FBG2	1589.545
Calibration factor, S [N/nm]	416.515

Sensor Data

Measurement range [N]	[0;500]
Operation wavelength range [nm]	
FBG1	[1579.3 , 1580]
FBG2	[1589.5 , 1590.2]
Dependence of sensitivity coefficient on temperature [%/10ºC]	0.5

Configuration Equation

$$F = S \times \left[\left(\lambda_2 - \lambda_{02}\right)_{FBG2} - \left(\lambda_1 - \lambda_{01}\right)_{FBG1}\right]$$

Legend:

F: Force [N]

λ_{01}: Reference wavelength FBG_1 of the force sensor [nm] @ RT
= Wavelength FBG_1 at zero instant (after installation)

λ_{02}: Reference wavelength FBG_2 of the force sensor [nm] @ RT
= Wavelength FBG_2 at zero instant (after installation)

λ_1: Measured wavelength FBG_1 of the force sensor [nm]

λ_2: Measured wavelength FBG_2 of the force sensor [nm]

0 N: zero load on force sensor positioned with arrow down

RT: Room temperature

Fig. 5.5 FS66HDL Calibration Data Example

The reference wavelength values should be updated on the “Configure ranges” interface

- Define FBG’s reference wavelengths as presented on the calibration sheets (number **5** in *Fig. 5.2*)
- Apply settings (number **3** in *Fig. 5.2*)
- Repeat for all connectors by changing the selected connector (number **4** in *Fig. 5.2*)

Change to the DAQ channels’ view

- Ensure that all channels of the interrogator are defined as “wavelength (rel)” (number **2** in *Fig. 5.3*)

Sensor Type	Description	Output
Wavelength (rel.)	Wavelength sensors output is a wavelength variation measured on the FBG peak	$\lambda - \lambda_0$

- Rename the sensor by double clicking on top of the channel name (number **3** in *Fig. 5.3*)
- Each sensor will need two signals. As a suggestion add "_1" and "_2" to the sensor name, ensuring the correspondence to the calibration sheet.

These individual measurements per FBG peak correspond to the wavelength variations towards the calibration reference wavelengths.

For combining the measurements of the two FBG of each sensor, there is the need to create a computational sensor

- Click on the "new" computational channel button (number **1** in *Fig. 5.6*)

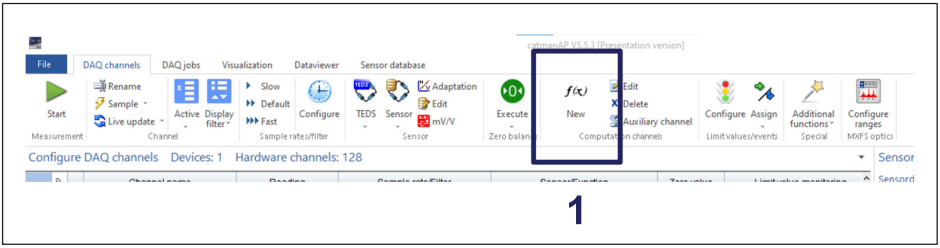

Fig. 5.6 New computational channel button

As each FBG is configured to measure relative wavelength, the parcels ($\lambda - \lambda_0$) are corresponding to the channel value.

- Configure the computational channel with the sensitivity values corresponding to each sensor. An example of a configuration for the FS66HDL is given in *Fig. 5.7*.
- Write the name of the sensor (number **1**)
- Define the corresponding output unit (number **2**)
- Write down the algebraic expression as given on the sensor calibration sheet (number **3**)
- Press "create computation" button (number **4** in *Fig. 5.7*).

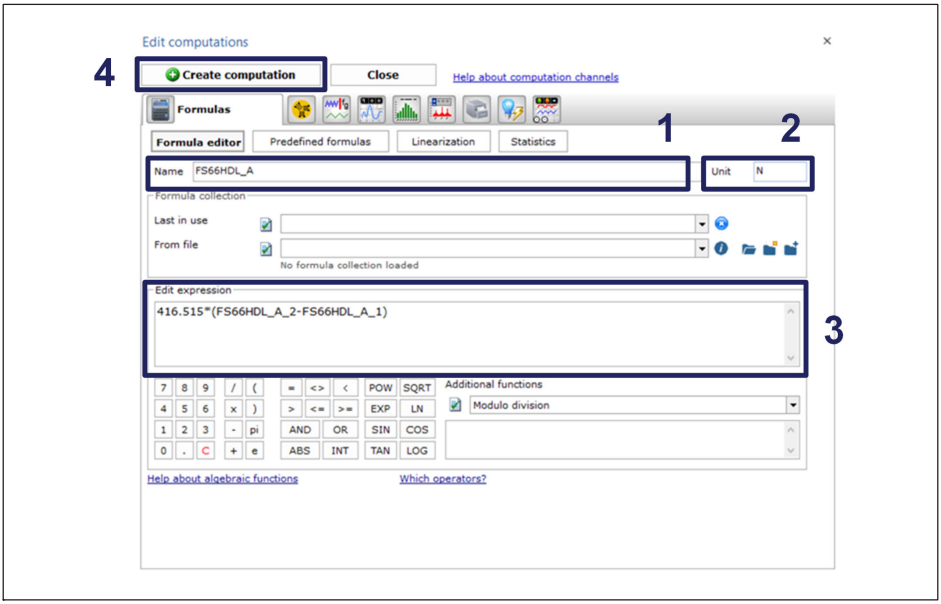

Fig. 5.7 Creating a computational channel to configure the sensor

Upon completing the full configuration, 8 computational channels should be created (4 for acceleration and 4 for force measurement).

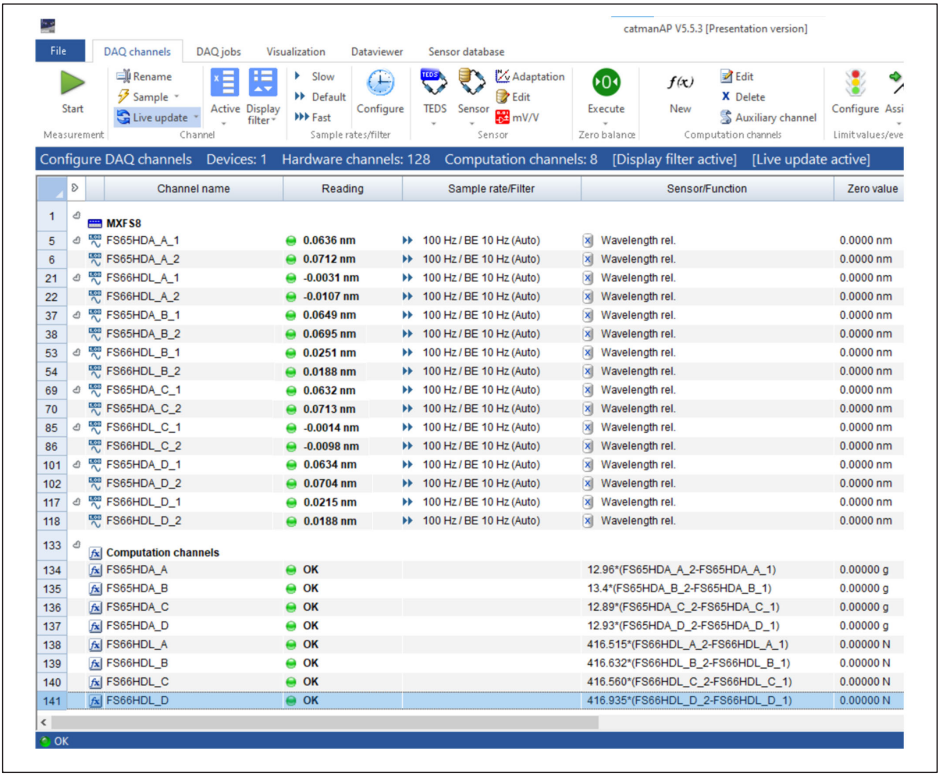

Fig. 5.8 Complete system configuration of 4xFS65HDA and 4xFS66HDL

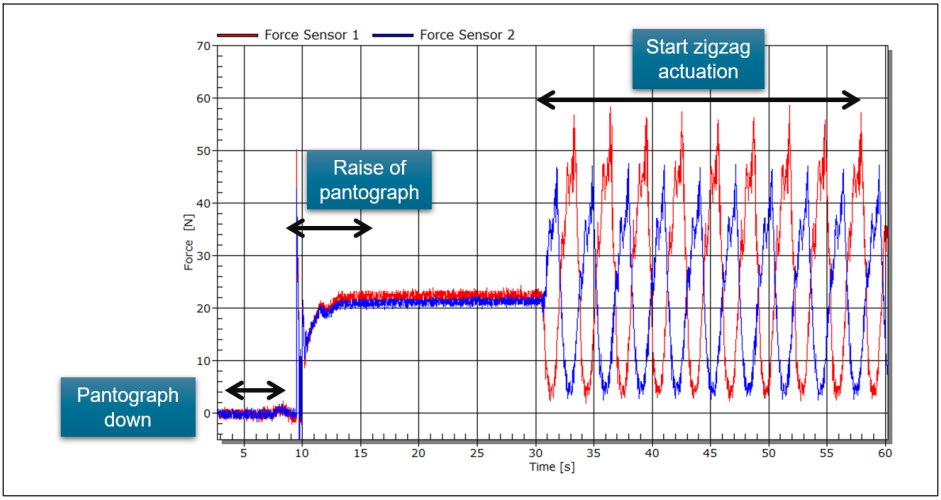

Fig. 5.9 Example of force measurement in catman

5.4 Contact force and position

The Pantograph Monitoring Solution enables the computation of the contact force and sideway position in accordance with EN50317 standards.

The contact force can be calculated using the formula below, considering the force measurements of the FS66HDL sensors and the acceleration from the FS65HDA sensors. Additionally, a correction due to the aerodynamics of the pantograph (dependent on train velocity) is needed.

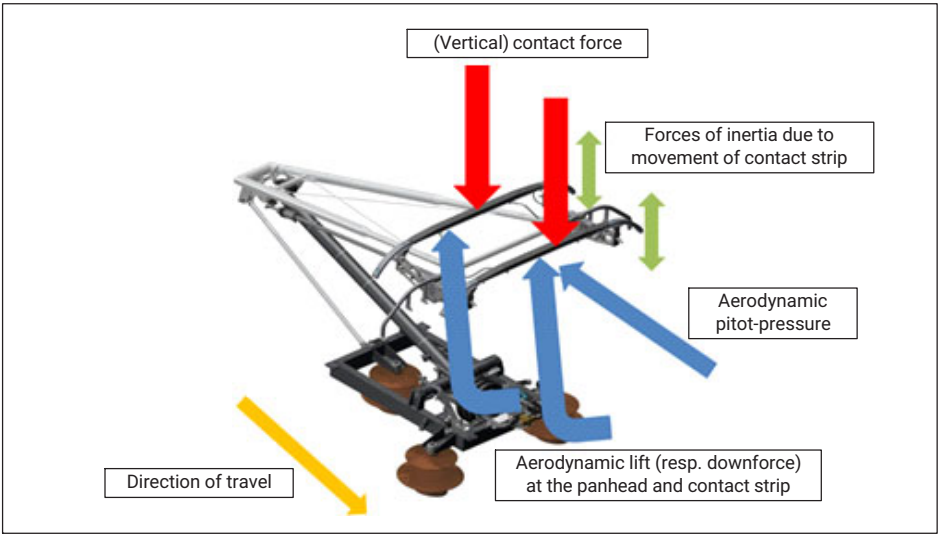

Fig. 5.10 Forces and Effects on Pantograph Structures

5.4.1 Contact Force

$$F_c = \sum_{i=1}^{k_f} F_{Sensor,i} + \frac{m_{above}}{k_a} \sum_{i=1}^{k_a} a_{Sensor,i} + F_{corr,aero}$$

Fig. 5.11 Contact force computation formula according to EN50317

Where:

- F_c is the contact force, in N
- $F_{Sensor,i}$ is the measured force at sensor I, in N
- $a_{Sensor,i}$ is the measured acceleration at sensor I, in g
- k_f is the number of force sensors
- k_a is the number of acceleration sensors

- m_{above} is the mass of the panhead located above the force sensors
- $F_{corr;aero}$ is the aerodynamic correction force, in N, that is velocity dependent and can be retrieved from lookup table

5.4.2 Position

The position of the contact to the overhead power line on each contact strip can be determined using the formula from *Fig. 5.12*.

$$x = \frac{F_2}{F_1 + F_2} L - L/2$$

Fig. 5.12 Position of the contact line computation

Where:

- x is the contact position, in mm, considering the origin (x = 0) in the middle of the contact strip
- F_1 and F_2 are the measured forces, in N, from sensor 1 and 2, on each side of the contact strip
- L is the distance between force sensors, in mm

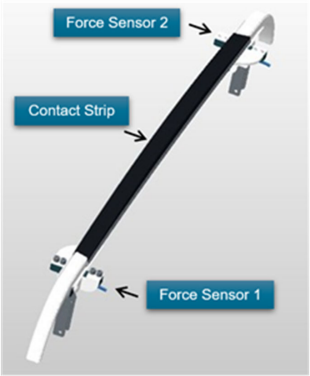

Fig. 5.13 Sensor positioning on the contact strip

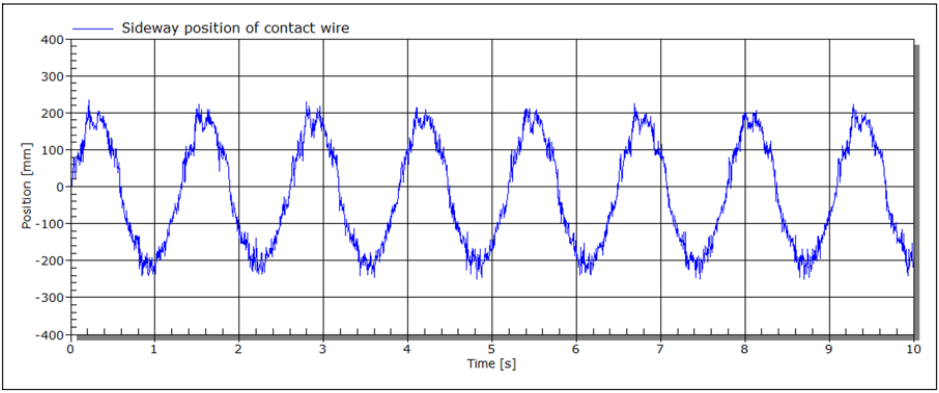

Fig. 5.14 Example of position measurement representing a zigzag movement of the contact wire

The contact force and position computation can also be seamlessly configured in catman using the computational channels.

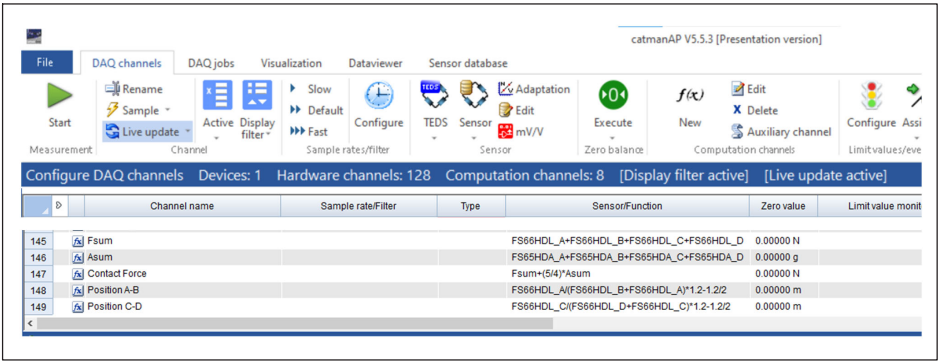

Fig. 5.15 Contact force and contact position computation in catman

6 SYSTEM MAINTENANCE

Components of the Pantograph Monitoring Solution are is designed to withstand their operating conditions without being damaged. It is not expected that they require maintenance. However, the installation robustness can degrade over time and repairs might be needed.

6.1 Interrogators

For maintenance and troubleshooting check the interrogator's user manual available on HBK website (www.hbkworld.com). lease contact HBK for extra support. In case a remote intervention is not possible nor successful, the interrogator should be returned for diagnosis and repair. Note that repairs performed by HBK FiberSensing may be subject to a fee.

6.2 Sensors

If the sensors require repair or maintenance, it should be performed by HBK FiberSensing at their facilities. Please contact HBK for support. Note that repairs performed by HBK FiberSensing may be subject to a fee.

6.3 Cables

If a cable is damaged during installation or use they should be sent back to HBK FiberSensing for diagnosis and repair. Please contact HBK for support. Note that repairs performed by HBK FiberSensing may be subject to a fee.

6.4 Connectors

If a connector is damaged it needs to be returned for reconnection. Please contact HBK for support. Note that repairs performed by HBK FiberSensing may be subject to a fee.

HBK - Hottinger Brüel & Kjaer
www.hbkworld.com
info@hbkworld.com

A05955 03 E00 00